三力信®
Sanlixin®

# SOLENOID VALVE

National High-tech Enterprise

## FLAMEPROOF SOLENOID VALVE

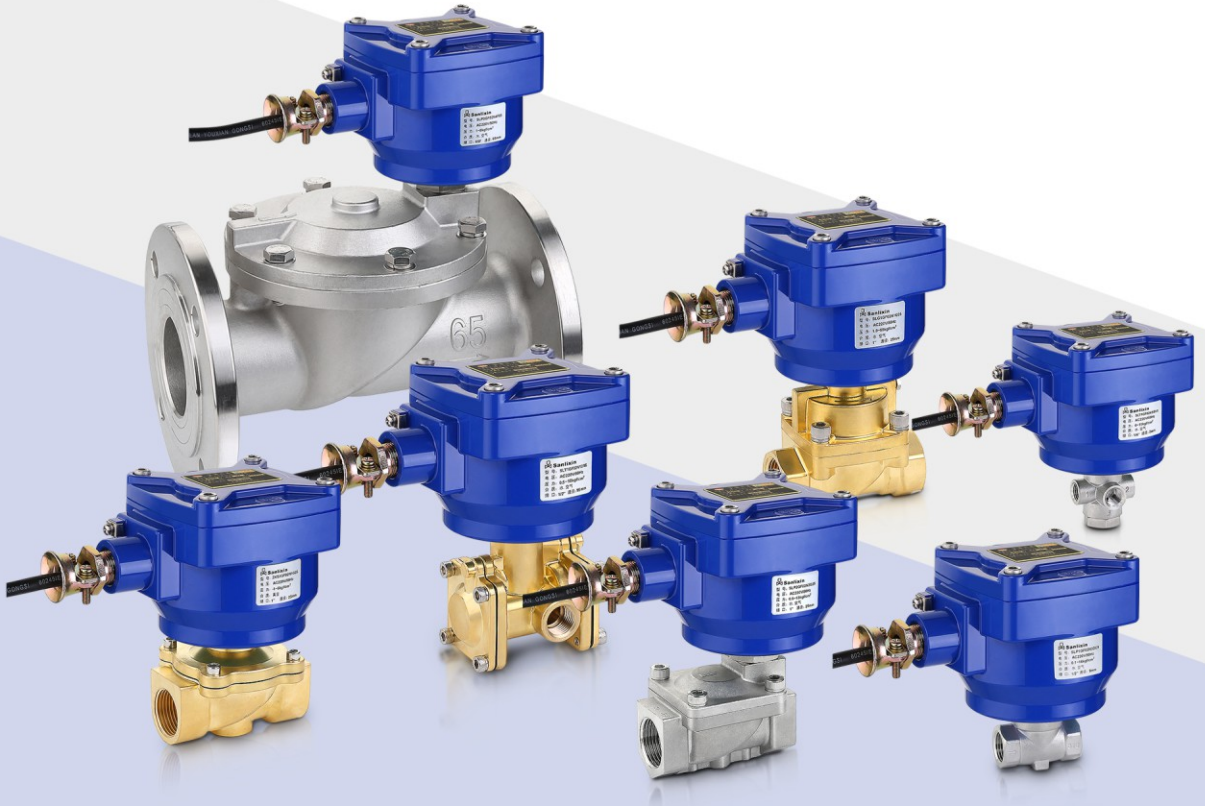

YUYAO SANLIXIN SOLENOID VALVE CO.,LTD.

三力信
Sanlixin®

# Brief Introduction

Sanlixin since 1993, specializes in designing and manufacturing all kinds of fluid solenoid valve, We participate in the drafting of the national industrial fluid solenoid valve safety standards and have numbers of patents.

Media: water, hot water, air, steam, gas, oil and acid alkali
Pipe Size: DN0.8 to DN300
Working pressure: Max.450bar.
Fluid temperature: from ultra-low temp. to 300°C
Valve body: Brass, SS304, SS316, PP, Pa6+, PTFE, Aluminum, Cast Iron
Seals: NBR, EPDM, VITON, SILICA GEL, TEFLON, PEEK, HNBR

Our company has more than 50 series and passed ISO9001:2015 TUV、CE、UL、NSF、WRAS、Ex approval.

**HIGH QUALITY BEST SERVICE**











NSF International

789 N. Dixboro Road, Ann Arbor, MI 48105 USA

RECOGNIZES

Yuyao Sanlixin Solenoid Valve Co., Ltd.

Facility: Zhejiang, China

AS COMPLYING WITH NSF/ANSI 61, 372 AND ALL APPLICABLE REQUIREMENTS.
PRODUCTS APPEARING IN THE NSF OFFICIAL LISTING ARE
AUTHORIZED TO BEAR THE NSF MARK.

NSF

ANSI

This certificate is the property of NSF International and must be returned upon request. This certificate remains valid as long as this client has products in Listing for the referenced standards. For the most current and complete Listing information, please review NSF's website (www.nsf.org).

September 22, 2017
Certificate# C0130731 - 01

David Purkiss
General Manager, Plumbing



NSF International

789 N. Dixboro Road, Ann Arbor, MI 48105 USA

RECOGNIZES

Yuyao Sanlixin Solenoid Valve Co., Ltd.

China

AS COMPLYING WITH NSF/ANSI 61, 372 AND ALL APPLICABLE REQUIREMENTS.
PRODUCTS APPEARING IN THE NSF OFFICIAL LISTING ARE
AUTHORIZED TO BEAR THE NSF MARK.

NSF

ANSI

This certificate is the property of NSF International and must be returned upon request. This certificate remains valid as long as this client has products in Listing for the referenced standards. For the most current and complete Listing information, please review NSF's website (www.nsf.org).

September 22, 2017
Certificate# C0130750 - 01

David Purkiss
General Manager, Plumbing



CERTIFICATE OF COMPLIANCE

Certificate Number 20190730-MH63799
Report Reference MH63799-20190730
Issue Date 2019-JULY-30

Issued to: Yuyao Sanlixin Solenoid Valve Co Ltd
No 9 Hongqiao Rd, Yuyao
Ningbo
Zhejiang 315400 China

This certificate confirms that representative samples of: Component - Valve Parts, Electrically Operated Coil Assembly, Series D04, Type Numbers: D04-3101U, D04-3102U, D04-3104U, D04-3106U, D04-3107U, D04-31011U and D04-31013U.

Have been investigated by UL in accordance with the component requirements in the Standard(s) indicated on this Certificate. UL Recognized components are incomplete in certain constructional features or restricted in performance capabilities and are intended for installation in complete equipment submitted for investigation to UL LLC.

Standard(s) for Safety: UL 429, Electrically Operated Valves
Additional Information: See the UL Online Certifications Directory at https://iq.ulprospector.com for additional information.

This *Certificate of Compliance* does not provide authorization to apply the UL Recognized Component Mark. Only the UL Follow-Up Services Procedure provides authorization to apply the UL Mark.

Only those products bearing the UL Recognized Component Mark should be considered as being UL Certified and covered under UL's Follow-Up Services.

Look for the UL Recognized Component Mark on the product.

Page 1 of 1



TÜV NORD

Certificate
of conformity with the following
European Directive

Registered No.:
44 799 14 406748 - 026

Low-Voltage Directive 2014/35/EU

This is to certify that the following products comply to the essential requirements (Annex I) of the above mentioned European Directive and the following standards, taking into account the German national deviations:

Product: Solenoid valve
Type designation: SLP series
Applicant: YUYAO SANLIXIN SOLENOID VALVE CO., LTD.
No.9 Hongqiao Road, Yuyao, Zhejiang, China
Standard(s): EN 60730-1:2016

This certificate of conformity is based on the evaluation of samples of the product.
It does not imply an assessment of the production and it does not permit the use of a mark of conformity or of a safety mark of the TÜV NORD CERT GmbH.
The holder of this certificate may use it together with his EU Declaration of Conformity.

Certification Body
Specialist Manager Courrier Products

TÜV NORD CERT GmbH
Langemarckstrasse 20
D-45141 Essen
P.O.Box 10 32 61
D-45032 Essen
Fax: +49 (0)201 825-5120
Fax: +49 (0)201 825-3209
Email: prodcert@tuev-nord.de

The CE marking may be affixed on the product if all relevant and effective Directives are complied with.



TÜV NORD

Certificate
of conformity with the following
European Directive

Registered No.:
44 799 14 406748 - 029

Low-Voltage Directive 2014/35/EU

This is to certify that the following products comply to the essential requirements (Annex I) of the above mentioned European Directive and the following standards, taking into account the German national deviations:

Product: Solenoid valve
Type designation: SLA series
Applicant: YUYAO SANLIXIN SOLENOID VALVE CO., LTD.
No.9 Hongqiao Road, Yuyao, Zhejiang, China
Standard(s): EN 60730-1:2016

This certificate of conformity is based on the evaluation of samples of the product.
It does not imply an assessment of the production and it does not permit the use of a mark of conformity or of a safety mark of the TÜV NORD CERT GmbH.
The holder of this certificate may use it together with his EU Declaration of Conformity.

Certification Body
Specialist Manager Courrier Products

TÜV NORD CERT GmbH
Langemarckstrasse 20
D-45141 Essen
P.O.Box 10 32 61
D-45032 Essen
Fax: +49 (0)201 825-5120
Fax: +49 (0)201 825-3209
Email: prodcert@tuev-nord.de

The CE marking may be affixed on the product if all relevant and effective Directives are complied with.



中安认证

质量管理体系认证证书

经北京中安质环认证中心审核，确认

余姚市三力信电磁阀有限公司

统一社会信用代码：91330281720489027D

（注册地址：浙江省余姚市虹桥路9号　邮编：315400）

质量管理体系符合：

GB/T19001—2016/ISO9001:2015

本质量管理体系覆盖下列产品：

2W（ZS）、DF、ZCT、SLC、SLP系列电磁阀产品的设计、生产和服务

地址：浙江省余姚市虹桥路9号。

注册号：02820Q10043R0M

有效期:2017年12月19日至2020年12月21日

颁证日期：2017年12月18日

北京中安质环认证中心
(原8+1质量体系认证中心)
（地址：北京市朝阳区东三环南路58号富顿中心1号楼22层　邮编：100022）

中心主任：

IAF　CNAS　MANAGEMENT SYSTEM　CNAS C029-M



编号：CNEx21.3109X

CNEX
国家防爆

防爆合格证

| | |
|---|---|
| 制造单位 | 余姚市三力信电磁阀有限公司（地址：浙江省余姚市虹桥路9号） |
| 产品名称 | 隔爆线圈 |
| 型号规格 | XIV-220VAC　AC220V |
| 防爆标志 | Ex d IIB T4 Gb |
| 产品标准 | GYSLX 10-2021 |
| 总装图号 | XIV |

经对上述产品图样及技术文件的审查和样品检验，确认符合下列标准：
GB3836.1-2010《爆炸性环境　第1部分：设备　通用要求》
GB3836.2-2010《爆炸性环境　第2部分：由隔爆外壳"d"保护的设备》

记事：
1.本产品是与电磁阀配合使用，壳体外部喷涂红漆。
2.工作环境温度：-20℃～+55℃。
3.外壳防护等级：IP65。
4.本证书可代表产品：防爆标志：Ex d IIB T4 Gb
XIV-220VAC　AC220V、XIV-127VAC　AC127V、XIV-110VAC　AC110V、XIV-36VAC　AC36V、XIV-24VAC　AC24V、XIV-24VDC　DC24V、XIV-12VDC　DC12V

中心主任　　颁发日期　2021年10月20日
本证有效期　2021年10月20日至2026年10月19日

南阳防爆电气研究所
国家防爆电气产品质量检验检测中心

**Flameproof Electromagnetic Coil** ---------- P01

Ambient temp：-20℃~+55℃ IP Code：IP65
Pressure：80~110kpa Relative humidity：≤95%（+25℃）
Flame-proof grade：Ex d IIB T4 Gb



**ZS Series 2/2-way Zero Press Differential Flameproof Solenoid Valve** ------- P02

**ZS Series 2/2-way Direct Acting(Brass) Flameproof Solenoid Valve <Normally Closed>** ---------- P03-04

Body material：Forged Brass Pressure：0~20kgf/cm²
Orifice：Φ10mm~20mm Pipe size：1/4"~1"
Medium：Water、Hot water、Air、Gas、Light oil



**ZS Series 2/2-way Direct Acting(Stainless steel) Flameproof Solenoid Valve <Normally Closed>** ---------- P05-06

Body material：SS304 Pressure：0~20kgf/cm²
Orifice：Φ10mm~20mm Pipe size：1/4"~1"
Medium：Water、Hot water、Air、Gas、Light oil



**ZS 2/2-way Large diameter Direct Acting(*B*rass) Flameproof Solenoid Valve <Normally Closed>** ---------- P07-08

Body material：Forged Brass Pressure：0~10kgf/cm²
Orifice：Φ16mm~25mm Pipe size：3/8"~1"
Medium：Water、Hot water、Air、Gas、Light oil



**ZS Series 2/2-way Zero Press Differential(Stainless steel) Flameproof Solenoid Valve<Normally Closed>** ---- P09-10

Body material：SS304 Pressure：0~10kgf/cm²
Orifice：Φ16mm~25mm Pipe size：3/8"~1"
Medium：Water、Hot water、Air、Gas、Light oil



**ZS Stainless Steel Flange Series Flameproof Solenoid Valve <Normally Closed>** ---------- P11

Body material：SS304 Pressure：0~10kgf/cm²
Orifice：Φ16mm~25mm Flange：DN15~25
Medium：Water、Hot water、Air、Gas、Light oil



**ZS Brass Series 2/2-way Zero Press Differential Flameproof Solenoid Valve<Normally Open>** ---------- P12-13

Body material：Forged Brass Pressure：0~5kgf/cm²
Orifice：Φ16mm~25mm Pipe size：3/8"~1"
Medium：Water、Hot water、Air、Gas、Light oil



**ZS Stainless steel Series 2/2-way Zero Press Differential Flameproof Solenoid Valve<Normally Open>** ------ P14-15

Body material：SS304 Pressure：0~5kgf/cm²
Orifice：Φ16mm~25mm Pipe size：3/8"~1"
Medium：Water、Hot water、Air、Gas、Light oil



**ZS Stainless steel Series 2/2-way Zero Press Differential Flameproof Solenoid Valve<Normally Open>** --------- P16

Body material：SS304 Pressure：0~5kgf/cm²
Orifice：Φ16mm~25mm Pipe size：DN15~25
Medium：Water、Hot water、Air、Gas、Light oil



**SLP Series 2/2-way Flameproof Solenoid Valve** ---------- P17

**SLP Compact Series 2/2-way Direct Acting Flameproof Solenoid Valve <Normally Closed>** ---------- P18-20

Body material：Forged Brass、SS316　　Pressure：0~30kgf/cm²
Orifice：Φ1mm~6mm　　Pipe size：1/8"~1/2"
Medium：Water、Hot water、Air、Gas、Light oil



**SLP Small Series 2/2-way Direct Acting Flameproof Solenoid Valve <Normally Closed>** ---------- P21

Body material：Forged Brass、SS316　　Pressure：0~13kgf/cm²
Orifice：Φ3mm~4mm　　Pipe size：3/8"
Medium：Water、Hot water、Air、Gas、Light oil



**SLP Compact Series 2/2-way Direct Acting Flameproof Solenoid Valve <Normally open>** ---------- P22-23

Body material：Forged Brass、SS316　　Pressure：0~30kgf/cm²
Orifice：Φ1mm~4mm　　Pipe size：1/8"~1/4"
Medium：Water、Hot water、Air、Gas、Light oil



**SLP Small Series 2/2-Way Pilot Operated (Brass) Flameproof Solenoid Valve <Normally Closed>** ---------- P24

Body material：Forged Brass　　Pressure：0.1~16kgf/cm²
Orifice：Φ10.5mm　　Pipe size：1/4"~1/2"
Medium：Water、Hot water、Air、Gas、Light oil



**SLP Small Series 2/2-Way Pilot Operated (Stainless steel) Flamepoof Solenoid Valve <Normally Closed>** ---------- P25

Body material：SS316　　Pressure：0.1~16kgf/cm²
Orifice：Φ9mm　　Pipe size：1/4"~1/2"
Medium：Water、Hot water、Air、Gas、Light oil



**SLP Small Series 2/2-Way Direct Acting (Brass) Flameproof Solenoid Valve <Normally Closed>** ---------- P26

Body material：Forged Brass　　Pressure：0~16kgf/cm²
Orifice：Φ10.5mm　　Pipe size：1/4"~1/2"
Medium：Water、Hot water、Air、Gas、Light oil



**SLP Small Series 2/2-Way Direct Acting (Stainless steel) Flameproof Solenoid Valve <Normally Closed>** ---------- P27

Body material：SS316　　Pressure：0~16kgf/cm²
Orifice：Φ9mm　　Pipe size：1/4"~1/2"
Medium：Water、Hot water、Air、Gas、Light oil



**SLP Series 2/2-Way Large Diameter Pilot Operated (Brass) Flameproof Solenoid Valve <Normally Closed>** ---------- P28-29

Body material：Forged Brass　　Pressure：0.5~16kgf/cm²
Orifice：Φ13mm~50mm　　Pipe size：3/8"~2"
Medium：Water、Hot water、Air、Gas、Light oil



**SLP Series 2/2-Way Large Diameter Pilot Operated (Stainless steel) Flameproof Solenoid Valve <Normally Closed>** ---------- P30-31

Body material：SS316　　Pressure：0.5~16kgf/cm²
Orifice：Φ13mm~50mm　　Pipe size：3/8"~2"
Medium：Water、Hot water、Air、Gas、Light oil



**SLP Series 2/2-Way Stainless Steel Flange Flameproof Solenoid Valve <Normally Closed>** ---------- P32-33

Body material：Stainless Steel　Pressure：0.5~16kgf/cm²
Orifice：Φ25mm~100mm　Flange：DN25~100
Medium：Water、Hot water、Air、Gas、Light oil



**SLP Series 2/2-Way Large Diameter Pilot Operated (Brass) Flameproof Solenoid Valve <Normally Open>** ---------- P34-35

Body material：Forged Brass　Pressure：0.5~13kgf/cm²
Orifice：Φ13mm~50mm　Pipe size：3/8"~2"
Medium：Water、Hot water、Air、Gas、Light oil



**SLP Series 2/2-Way Large Diameter Pilot Operated ((Stainless steel) Flameproof Solenoid Valve <Normally Open>** ---------- P36-37

Body material：SS316　Pressure：0.5~13kgf/cm²
Orifice：Φ13mm~50mm　Pipe size：3/8"~2"
Medium：Water、Hot water、Air、Gas、Light oil



**SLP Series 2/2-Way Stainless Steel Flange Flameproof Solenoid Valve <Normally Open>** ---------- P38-39

Body material：Stainless Steel　Pressure：0.5~13kgf/cm²
Orifice：Φ25mm~100mm　Flange：DN25~100
Medium：Water、Hot water、Air、Gas、Light oil



**SLA Series 2/2-way Flameproof Solenoid Valve** ---------- P40

**SLA Brass Series 2/2-way Flameproof Solenoid Valve <Normally Closed>** ---------- P41-42

Body material：Forged Brass　Pressure：0.5~25kgf/cm²
Orifice：Φ15mm~50mm　Flange：3/8"~2"
Medium：Steam、Water、Hot water、Air、Light oil



**SLA Stainless steel Series 2/2-way Flameproof Solenoid Valve <Normally Closed>** ---------- P43

Body material：SS304　Pressure：0.5~25kgf/cm²
Orifice：Φ15mm~50mm　Pipe size：3/8"~2"
Medium：Steam、Water、Hot water、Air、Light oil



**SLA Stainless steel Flange Series 2/2-way Flameproof Solenoid Valve <Normally Closed>** ---------- P44

Body material：SS304　Pressure：0.5~25kgf/cm²
Orifice：Φ25mm~50mm　Flange：DN25~50
Medium：Steam、Water、Hot water、Air、Light oil



**SLA Brass Series 2/2-way Flameproof Solenoid Valve <Normally Open>** ---------- P45-46

Body material：Forged Brass　Pressure：0.5~10kgf/cm²
Orifice：Φ15mm~50mm　Pipe size：3/8"~2"
Medium：Steam、Water、Hot water、Air、Light oil



**SLA Stainless steel Series 2/2-way Flameproof Solenoid Valve <Normally Open>** ---------- P47

Body material：SS304　Pressure：0.5~10kgf/cm²
Orifice：Φ15mm~50mm　Pipe size：3/8"~2"
Medium：Steam、Water、Hot water、Air、Light oil



**SLA Stainless steel Flange Series 2/2-way Flameproof Solenoid Valve <Normally Open>** ---------- P48

Body material: SS304 | Pressure: 0.5~10kgf/cm²
Orifice: Φ25mm~50mm | Flange: DN25~50
Medium: Steam、Water、Hot water、Air、Light oil



**SLG Series 2/2-way High Pressure Flameproof Solenoid Valve <Normally Closed>** ---------- P49-51

Body material: Forged Brass、Stainless Steel | Pressure: 0~100kgf/cm²
Orifice: Φ1.0mm~25mm | Pipe size: 1/8"~1"
Medium: Water、Hot water、Air、Light oil



**SLT Series 3/2-way Direct Acting Flameproof Solenoid Valve** ---------- P52-57

Body material: Forged Brass、Stainless Steel | Pressure: 0~13kgf/cm²
Orifice: Φ1.5mm~6mm | Pipe size: 1/8"~1/4"
Medium: Water、Hot water、Air、Light oil



**SLT Series 3/2-way Pilot Opearted Diaphragm Flameproof Solenoid Valve** P58-59

Body material: Forged Brass | Pressure: 0.5~10kgf/cm²
Orifice: Φ16mm | Pipe size: 3/8"~1/2"
Medium: Water、Hot water、Air



**SAV Series Direct Acting Gas Flameproof Solenoid Valve <Normally Closed>** ---------- P60-61

Body material: Aluminium Alloy | Pressure: 0~800mbar
Orifice: Φ6mm~19mm | Pipe size: 1/4"~3/4"
Medium: Air、Fuel Gas



**ZKS Vacuum Series Flameproof Solenoid Valve** ---------- P62

**ZKS Compact Series 2/2-way Direct Acting Vacuum Flameproof Solenoid Valve <Normally Closed>** ---------- P63-64

Body material: Forged Brass、Stainless Steel | Pressure: −1~5kgf/cm²
Orifice: Φ2.5mm~5mm | Pipe size: 1/8"~1/2"
Medium: Vacuum



**ZKS Series 2/2-way Large Diameter (Brass) Direct Acting Vacuum Flameproof Solenoid Valve <Normally Closed>** ---------- P65-66

Body material: Forged Brass | Pressure: −1~6kgf/cm²
Orifice: Φ16mm~25mm | Pipe size: 3/8"~1"
Medium: Vacuum



**ZKS Series 2/2-way Large Diameter(Stainless steel) Direct Acting Vacuum Flameproof Solenoid Valve <Normally Closed>** ---------- P67-68

Body material: SS304 | Pressure: −1~6kgf/cm²
Orifice: Φ16mm~25mm | Pipe size: 3/8"~1"
Medium: Vacuum



**ZKS Flange Series 2/2-way Large Diameter Direct Acting Vacuum Flameproof Solenoid Valve <Normally Closed>** ---------- P69-70

Body material: SS304 | Pressure: −1~6kgf/cm²
Orifice: Φ15mm~25mm | Flange: DN15~25
Medium: Vacuum



# *Flameproof Electromagnetic Coil*

## Product Feature

Flameproof coil is all the devices may be lit with explosive gas mixture components enclosed in a shell, the shell can withstand any shell surface or structure clearance, infiltrate into the inside of the shell of combustible mixture in the internal explosion damaged, not caused by an outside and a variety of gas or steam formation of explosive environment to light.

Ambient temp：-20℃~+55℃

Allowable pressure：80~110kpa Relative humidity ：≤95%（+25℃）

Voltage：AC220V 、DC24V（Other voltage can ask the company）

Seals：NBR、EPDM、VITON

Flame-proof grade：Ex d IIB T4 Gb

IP Code：IP65

Explosion-proof standard ：GB3836.1、GB3836.2。

Temperature lever T4:Safe object surface temperature ≤135℃

It is suitable for other explosive gas environment except coal mine gas and the place containing Ⅱ A, Ⅱ B T1~T4 explosive gas environment zone 1 and 2

Flow as the arrow ,mounts in any position ; best position is solenoid vertical and upright direction

Specifications for thread of cable outlet device:M20x1.5
If the cable protective cover needs to be installed, the certified explosion-proof connector must be used



## Parameter

| Coil model | Ⅳ01-410 | |
|---|---|---|
| Rated voltage | AC220V/50Hz | DC24V |
| Rated power | 27VA | 22W |

Note: stock voltage:AC220V DC24V. Other voltage can ask the sales of company

## External Dimensions

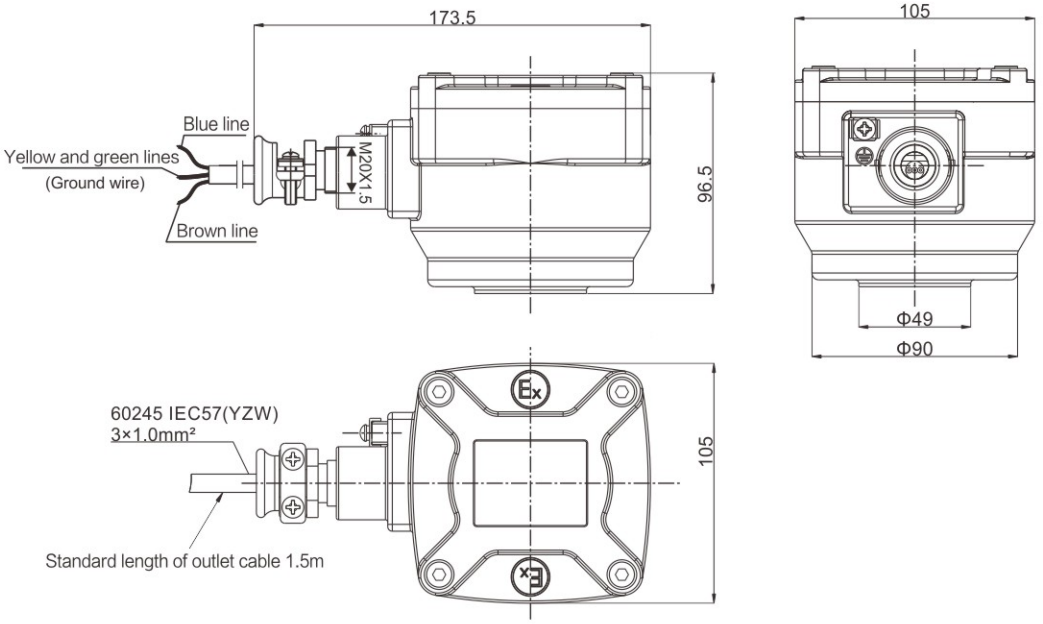

# ZS Series 2/2-way Zero Press Differential Flameproof Solenoid Valve

## Product Feature

Products for serialized production, large flow, zero differential pressure start, wide range of application

Body material:: Forged Brass、SS304 Stainless steel、SS316Stainless steel ( customized )

Ambient temp : -20℃~+55℃ Medium temperature : 0℃~+120℃

Atmospheric pressure: 80~110kpa Relative humidity: ≤95%(+25℃)

Voltage: AC220V 、DC24V ( Other voltage can ask the company )

Seals: NBR、EPDM、VITON

Flame-proof grade: Ex d IIB T4 Gb

Explosion-proof standard: GB3836.1、GB3836.2。

Temperature lever T4:Safe object surface temperature ≤135℃

It is suitable for other explosive gas environment except coal mine gas and the place containing Ⅱ A, Ⅱ B T1~T4 explosive gas environment zone 1 and 2

Flow as the arrow ,mounts in any position ; best position is solenoid vertical and upright direction

Specifications for thread of cable outlet device:M20x1.5
If the cable protective cover needs to be installed, the certified explosion-proof connector must be used




## Solenoid Valves Numbering System for Order

| 1 | 2 | 3 | 4 | 5 | 6 | 7 | 8 | 9 | 10 |
|---|---|---|---|---|---|---|---|---|---|
| Valve Series | Mode of Operation | Coil Type | Coil Class | Voltage | Seal Material | Body Material | Pipe Size | Orifice (mm) | Options |
| ZS | 1 | G | F | 02 | N | 9 | B | 10 | |
| | 1= Normally Closed<br>2= Normally Open | G= Flameproof coil | F= F grade | 02= AC220V<br>13= DC24V<br>Other voltage can ask the company | N=NBR<br>E=EPDM<br>V=VITON | 9=Forged Brass<br>4=SS304 | B=1/4 "<br>C=3/8 "<br>D=1/2 "<br>E=3/4 "<br>G=1 " | 10=10.0<br>13=13.0<br>15=16.0<br>19=20.0 | N=NPT |
| | | | | | | 1=Forged Brass<br>4=SS304 | C=3/8 "<br>D=1/2 " | 16=16.0 | |
| | | | | | | | E=3/4 " | 20=20.0 | |
| | | | | | | | G=1 " | 20=20.0<br>25=25.0 | |
| | | | | | | 4=SS304 | F=Flange connection | 15=15.0<br>20=20.0<br>25=25.0 | |

# ZS Series 2/2-way Direct Acting(Brass) Flameproof Solenoid Valve <Normally Closed>

## Product Feature

2/2 way normally closed solenoid valve, closed when de-energized open , open when energized

Working pressure：0~20kgf/cm²

Body material: Brass

Ambient temp：-20℃~+55℃ Medium temperature：0℃~+120℃

Atmospheric pressure：80~110kpa Relative humidity ：≤95%(+25℃)

Voltage：AC220V 、DC24V ( Other voltage can ask the company )

Seals：NBR、EPDM、VITON

Flame-proof grade：Ex d IIB T4 Gb

Explosion-proof standard ：GB3836.1、GB3836.2。

It is suitable for other explosive gas environment except coal mine gas and the place containing Ⅱ A, Ⅱ B T1~T4 explosive gas environment zone 1 and 2

Flow as the arrow ,mounts in any position ; best position is solenoid vertical and upright direction

Specifications for thread of cable outlet device:M20x1.5
If the cable protective cover needs to be installed, the certified explosion-proof connector must be used



## External Dimensions

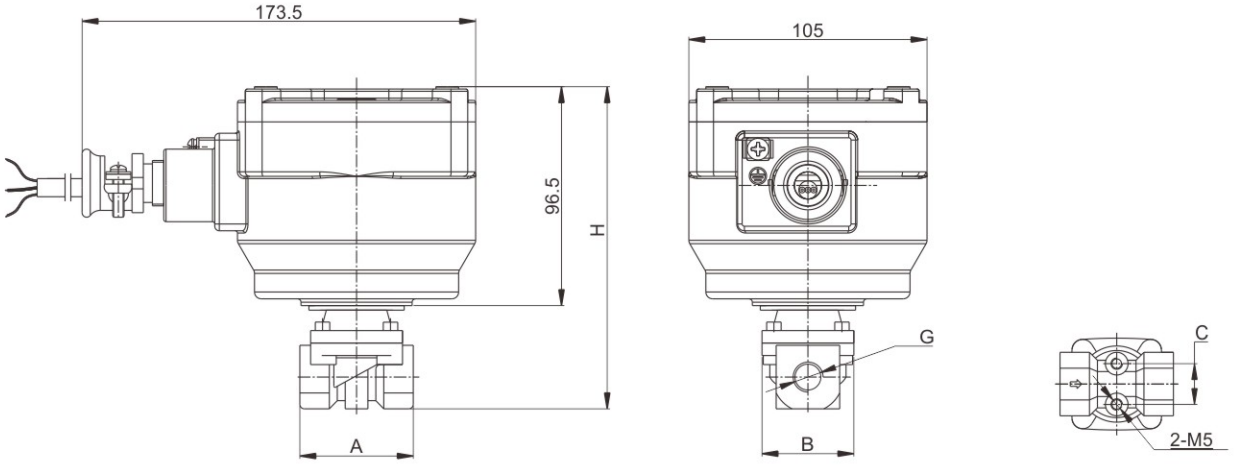


| Flow diameter(mm) | interface | A | B | C | H |
|---|---|---|---|---|---|
| Φ10 | 1/4" | 50 | 40.5 | 18 | 142 |
| | 3/8" | 50 | 40.5 | 18 | 142 |
| | 1/2" | 50 | 40.5 | 18 | 142 |
| Φ13 | 3/8" | 55 | 43 | 18 | 142 |
| | 1/2" | 55 | 43 | 18 | 142 |
| Φ16 | 1/2" | 60 | 49 | 25 | 147 |
| | 3/4" | 60 | 49 | 25 | 147 |
| Φ20 | 3/4" | 72 | 60 | 28 | 155 |
| | 1" | 72 | 60 | 28 | 155 |

# ZS Series 2/2-way Direct Acting(Brass) Flameproof Solenoid Valve <Normally Closed>

## Valve Selection List

| Pipe Size | Orifice mm | CV Factor | Operating pressure differential(kgf/cm²) | | | | | | | Max. fluids Temp. ℃ | Coil Type | Power consumption | | Coil Class | Model Code 220VAC | Weight KG |
|---|---|---|---|---|---|---|---|---|---|---|---|---|---|---|---|---|
| | | | Min. | Max. | | | | | | | | VA | W | | | |
| | | | | Air Gas | | Water Hot water Liquid | | Light oil | | | | AC 220V | DC 24V | | | |
| | | | | AC | DC | AC | DC | AC | DC | | | | | | | |
| 1/4 " | 10 | 1.9 | 0 | 20 | 16 | 20 | 16 | 20 | 16 | 80 | G | 27 | 22 | F | ZS1GF02N9B10 | 2.3 |
| | 10 | 1.9 | 0 | 20 | 16 | 20 | 16 | | | 120 | G | 27 | 22 | F | ZS1GF02E9B10 | 2.3 |
| | 10 | 1.9 | 0 | 20 | 16 | 20 | 16 | 20 | 16 | 120 | G | 27 | 22 | F | ZS1GF02V9B10 | 2.3 |
| 3/8 " | 10 | 2.4 | 0 | 20 | 16 | 20 | 16 | 20 | 16 | 80 | G | 27 | 22 | F | ZS1GF02N9C10 | 2.3 |
| | 10 | 2.4 | 0 | 20 | 16 | 20 | 16 | | | 120 | G | 27 | 22 | F | ZS1GF02E9C10 | 2.3 |
| | 10 | 2.4 | 0 | 20 | 16 | 20 | 16 | 20 | 16 | 120 | G | 27 | 22 | F | ZS1GF02V9C10 | 2.3 |
| | 13 | 3.1 | 0 | 16 | 12 | 16 | 12 | 16 | 12 | 80 | G | 27 | 22 | F | ZS1GF02N9C13 | 2.3 |
| | 13 | 3.1 | 0 | 16 | 12 | 16 | 12 | | | 120 | G | 27 | 22 | F | ZS1GF02E9C13 | 2.3 |
| | 13 | 3.1 | 0 | 16 | 12 | 16 | 12 | 16 | 12 | 120 | G | 27 | 22 | F | ZS1GF02V9C13 | 2.3 |
| 1/2 " | 10 | 2.4 | 0 | 20 | 16 | 20 | 16 | 20 | 16 | 80 | G | 27 | 22 | F | ZS1GF02N9D10 | 2.3 |
| | 10 | 2.4 | 0 | 20 | 16 | 20 | 16 | | | 120 | G | 27 | 22 | F | ZS1GF02E9D10 | 2.3 |
| | 10 | 2.4 | 0 | 20 | 16 | 20 | 16 | 20 | 16 | 120 | G | 27 | 22 | F | ZS1GF02V9D10 | 2.3 |
| | 13 | 3.1 | 0 | 16 | 12 | 16 | 12 | 16 | 12 | 80 | G | 27 | 22 | F | ZS1GF02N9D13 | 2.5 |
| | 13 | 3.1 | 0 | 16 | 12 | 16 | 12 | | | 120 | G | 27 | 22 | F | ZS1GF02E9D13 | 2.5 |
| | 13 | 3.1 | 0 | 16 | 12 | 16 | 12 | 16 | 12 | 120 | G | 27 | 22 | F | ZS1GF02V9D13 | 2.5 |
| | 16 | 4.0 | 0 | 12 | 10 | 12 | 10 | 12 | 10 | 80 | G | 27 | 22 | F | ZS1GF02N9D15 | 2.5 |
| | 16 | 4.0 | 0 | 12 | 10 | 12 | 10 | | | 120 | G | 27 | 22 | F | ZS1GF02E9D15 | 2.5 |
| | 16 | 4.0 | 0 | 12 | 10 | 12 | 10 | 12 | 10 | 120 | G | 27 | 22 | F | ZS1GF02V9D15 | 2.5 |
| 3/4 " | 16 | 4.0 | 0 | 12 | 10 | 12 | 10 | 12 | 10 | 80 | G | 27 | 22 | F | ZS1GF02N9E15 | 2.5 |
| | 16 | 4.0 | 0 | 12 | 10 | 12 | 10 | | | 120 | G | 27 | 22 | F | ZS1GF02E9E15 | 2.5 |
| | 16 | 4.0 | 0 | 12 | 10 | 12 | 10 | 12 | 10 | 120 | G | 27 | 22 | F | ZS1GF02V9E15 | 2.5 |
| | 20 | 5.6 | 0 | 10 | 10 | 10 | 10 | 10 | 10 | 80 | G | 27 | 22 | F | ZS1GF02N9E19 | 2.8 |
| | 20 | 5.6 | 0 | 10 | 10 | 10 | 10 | | | 120 | G | 27 | 22 | F | ZS1GF02E9E19 | 2.8 |
| | 20 | 5.6 | 0 | 10 | 10 | 10 | 10 | 10 | 10 | 120 | G | 27 | 22 | F | ZS1GF02V9E19 | 2.8 |
| 1 " | 20 | 5.6 | 0 | 10 | 10 | 10 | 10 | 10 | 10 | 80 | G | 27 | 22 | F | ZS1GF02N9G19 | 2.7 |
| | 20 | 5.6 | 0 | 10 | 10 | 10 | 10 | | | 120 | G | 27 | 22 | F | ZS1GF02E9G19 | 2.7 |
| | 20 | 5.6 | 0 | 10 | 10 | 10 | 10 | 10 | 10 | 120 | G | 27 | 22 | F | ZS1GF02V9G19 | 2.7 |

# ZS Series 2/2-way Direct Acting(Stainless steel)
# Flameproof Solenoid Valve <Normally Closed>

## Product Feature

2/2 way normally closed solenoid valve, closed when de-energized open , open when energized

Working pressure：0~20kgf/cm²
Body material: Stainless steel
Ambient temp：-20℃~+55℃ Medium temperature：0℃~+120℃
Atmospheric pressure：80~110kpa Relative humidity：≤95%(+25℃)
Voltage：AC220V 、DC24V(Other voltage can ask the company)
Seals：NBR、EPDM、VITON
Flame-proof grade：Ex d IIB T4 Gb
Explosion-proof standard：GB3836.1、GB3836.2。
It is suitable for other explosive gas environment except coal mine gas and the place containing Ⅱ A, Ⅱ B T1~T4 explosive gas environment zone 1 and 2
Flow as the arrow ,mounts in any position ; best position is solenoid vertical and upright direction
Specifications for thread of cable outlet device:M20x1.5
If the cable protective cover needs to be installed, the certified explosion-proof connector must be used



## External Dimensions

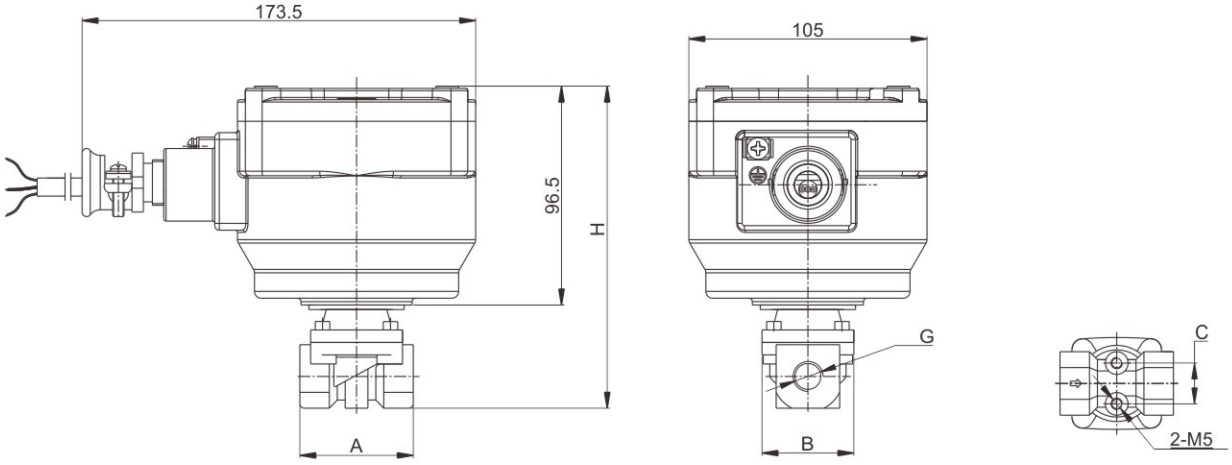


| Flow diameter(mm) | interface | A | B | C | H |
|---|---|---|---|---|---|
| Φ10 | 1/4" | 50 | 40.5 | 18 | 142 |
| | 3/8" | 50 | 40.5 | 18 | 142 |
| | 1/2" | 50 | 40.5 | 18 | 142 |
| Φ13 | 3/8" | 55 | 43 | 18 | 142 |
| | 1/2" | 55 | 43 | 18 | 142 |
| Φ16 | 1/2" | 60 | 49 | 25 | 147 |
| | 3/4" | 60 | 49 | 25 | 147 |
| Φ20 | 3/4" | 72 | 60 | 28 | 155 |
| | 1" | 72 | 60 | 28 | 155 |

# ZS Series 2/2-way Direct Acting(Stainless steel)
# Flameproof Solenoid Valve <Normally Closed>

## Valve Selection List

| Pipe Size | Orifice mm | CV Factor | Operating pressure differential(kgf/cm²) | | | | | | | Max. fluids Temp. ℃ | Coil Type | Power consumption | | Coil Class | Model Code 220VAC | Weight KG |
|---|---|---|---|---|---|---|---|---|---|---|---|---|---|---|---|---|
| | | | Min. | Max. | | | | | | | | VA | W | | | |
| | | | | Air Gas | | Water Hot water Liquid | | Light oil | | | | AC 220V | DC 24V | | | |
| | | | | AC | DC | AC | DC | AC | DC | | | | | | | |
| 1/4 " | 10 | 1.9 | 0 | 20 | 16 | 20 | 16 | 20 | 16 | 80 | G | 27 | 22 | F | ZS1GF02N9B10 | 2.3 |
| | 10 | 1.9 | 0 | 20 | 16 | 20 | 16 | | | 120 | G | 27 | 22 | F | ZS1GF02E9B10 | 2.3 |
| | 10 | 1.9 | 0 | 20 | 16 | 20 | 16 | 20 | 16 | 120 | G | 27 | 22 | F | ZS1GF02V9B10 | 2.3 |
| 3/8 " | 10 | 2.4 | 0 | 20 | 16 | 20 | 16 | 20 | 16 | 80 | G | 27 | 22 | F | ZS1GF02N9C10 | 2.3 |
| | 10 | 2.4 | 0 | 20 | 16 | 20 | 16 | | | 120 | G | 27 | 22 | F | ZS1GF02E9C10 | 2.3 |
| | 10 | 2.4 | 0 | 20 | 16 | 20 | 16 | 20 | 16 | 120 | G | 27 | 22 | F | ZS1GF02V9C10 | 2.3 |
| | 13 | 3.1 | 0 | 16 | 12 | 16 | 12 | 16 | 12 | 80 | G | 27 | 22 | F | ZS1GF02N9C13 | 2.3 |
| | 13 | 3.1 | 0 | 16 | 12 | 16 | 12 | | | 120 | G | 27 | 22 | F | ZS1GF02E9C13 | 2.3 |
| | 13 | 3.1 | 0 | 16 | 12 | 16 | 12 | 16 | 12 | 120 | G | 27 | 22 | F | ZS1GF02V9C13 | 2.3 |
| 1/2 " | 10 | 2.4 | 0 | 20 | 16 | 20 | 16 | 20 | 16 | 80 | G | 27 | 22 | F | ZS1GF02N9D10 | 2.3 |
| | 10 | 2.4 | 0 | 20 | 16 | 20 | 16 | | | 120 | G | 27 | 22 | F | ZS1GF02E9D10 | 2.3 |
| | 10 | 2.4 | 0 | 20 | 16 | 20 | 16 | 20 | 16 | 120 | G | 27 | 22 | F | ZS1GF02V9D10 | 2.3 |
| | 13 | 3.1 | 0 | 16 | 12 | 16 | 12 | 16 | 12 | 80 | G | 27 | 22 | F | ZS1GF02N9D13 | 2.5 |
| | 13 | 3.1 | 0 | 16 | 12 | 16 | 12 | | | 120 | G | 27 | 22 | F | ZS1GF02E9D13 | 2.5 |
| | 13 | 3.1 | 0 | 16 | 12 | 16 | 12 | 16 | 12 | 120 | G | 27 | 22 | F | ZS1GF02V9D13 | 2.5 |
| | 16 | 4.0 | 0 | 12 | 10 | 12 | 10 | 12 | 10 | 80 | G | 27 | 22 | F | ZS1GF02N9D15 | 2.5 |
| | 16 | 4.0 | 0 | 12 | 10 | 12 | 10 | | | 120 | G | 27 | 22 | F | ZS1GF02E9D15 | 2.5 |
| | 16 | 4.0 | 0 | 12 | 10 | 12 | 10 | 12 | 10 | 120 | G | 27 | 22 | F | ZS1GF02V9D15 | 2.5 |
| 3/4 " | 16 | 4.0 | 0 | 12 | 10 | 12 | 10 | 12 | 10 | 80 | G | 27 | 22 | F | ZS1GF02N9E15 | 2.5 |
| | 16 | 4.0 | 0 | 12 | 10 | 12 | 10 | | | 120 | G | 27 | 22 | F | ZS1GF02E9E15 | 2.5 |
| | 16 | 4.0 | 0 | 12 | 10 | 12 | 10 | 12 | 10 | 120 | G | 27 | 22 | F | ZS1GF02V9E15 | 2.5 |
| | 20 | 5.6 | 0 | 10 | 10 | 10 | 10 | 10 | 10 | 80 | G | 27 | 22 | F | ZS1GF02N9E19 | 2.8 |
| | 20 | 5.6 | 0 | 10 | 10 | 10 | 10 | | | 120 | G | 27 | 22 | F | ZS1GF02E9E19 | 2.8 |
| | 20 | 5.6 | 0 | 10 | 10 | 10 | 10 | 10 | 10 | 120 | G | 27 | 22 | F | ZS1GF02V9E19 | 2.8 |
| 1 " | 20 | 5.6 | 0 | 10 | 10 | 10 | 10 | 10 | 10 | 80 | G | 27 | 22 | F | ZS1GF02N9G19 | 2.7 |
| | 20 | 5.6 | 0 | 10 | 10 | 10 | 10 | | | 120 | G | 27 | 22 | F | ZS1GF02E9G19 | 2.7 |
| | 20 | 5.6 | 0 | 10 | 10 | 10 | 10 | 10 | 10 | 120 | G | 27 | 22 | F | ZS1GF02V9G19 | 2.7 |

# ZS 2/2-way Large diameter Direct Acting(Brass) Flameproof Solenoid Valve <Normally Closed>

## Product Feature

2/2 way normally closed solenoid valve, closed when de-energized open , open when energized

Working pressure：0~10kgf/cm$^2$

Body material：Forged Brass

Ambient temp：-20℃~+55℃ Medium temperature：0℃~+120℃

Atmospheric pressure：80~110kpa Relative humidity：≤95%(+25℃)

Voltage：AC220V 、DC24V(Other voltage can ask the company)

Seals：NBR、EPDM、VITON

Flame-proof grade：Ex d IIB T4 Gb

Explosion-proof standard：GB3836.1、GB3836.2。

It is suitable for other explosive gas environment except coal mine gas and the place containing Ⅱ A, Ⅱ B T1~T4 explosive gas environment zone 1 and 2

Flow as the arrow ,mounts in any position ; best position is solenoid vertical and upright direction

Specifications for thread of cable outlet device:M20x1.5
If the cable protective cover needs to be installed, the certified explosion-proof connector must be used



## External Dimensions

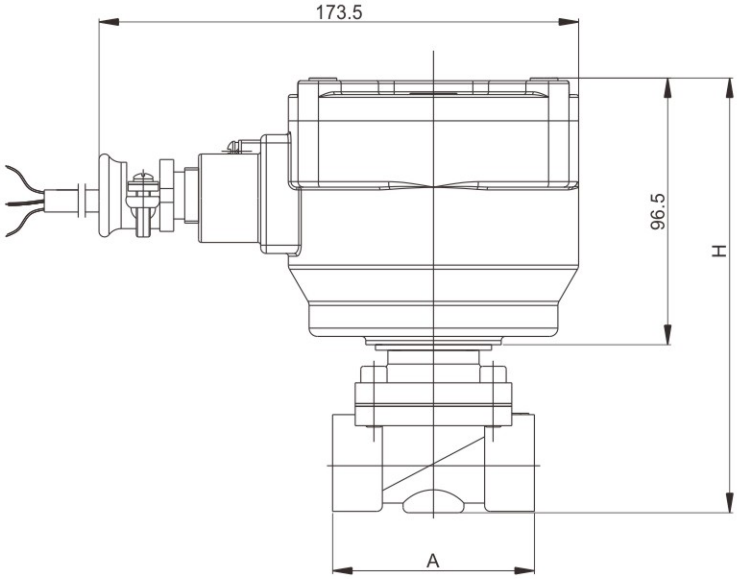


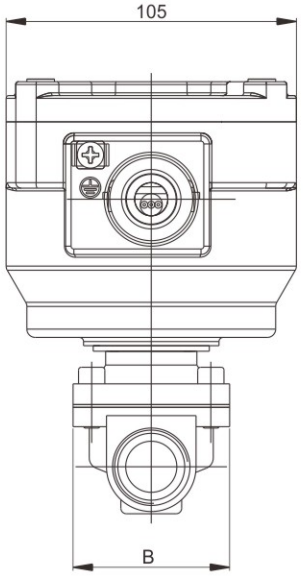

# ZS 2/2-way Large diameter Direct Acting(Brass) Flameproof Solenoid Valve <Normally Closed>

## Valve Selection List

| Pipe Size | Orifice mm | CV Factor | Operating pressure differential(kgf/cm²) | | | | | | | Max. fluids Temp. ℃ | Coil Type | Power consumption | | External Dimensions Length x Width x Height Lx B x H | Model Code 220VAC | Weight KG |
|---|---|---|---|---|---|---|---|---|---|---|---|---|---|---|---|---|
| | | | Min. | Max. | | | | | | | | VA | W | | | |
| | | | | Air Gas | | Water Hot water Liquid | | Light oil | | | | AC 220V | DC 24V | | | |
| | | | | AC | DC | AC | DC | AC | DC | | | | | | | |
| 3/8 " | 16 | 4.8 | 0 | 10 | 6 | 10 | 6 | 7 | 4 | 80 | G | 27 | 22 | 69 × 57 × 150 | ZS1GF02N1C16 | 2.5 |
| | 16 | 4.8 | 0 | 10 | 6 | 10 | 6 | | | 120 | G | 27 | 22 | 69 × 57 × 150 | ZS1GF02E1C16 | 2.5 |
| | 16 | 4.8 | 0 | 10 | 6 | 10 | 6 | 7 | 4 | 120 | G | 27 | 22 | 69 × 57 × 150 | ZS1GF02V1C16 | 2.5 |
| 1/2 " | 16 | 4.8 | 0 | 10 | 6 | 10 | 6 | 7 | 4 | 80 | G | 27 | 22 | 69 × 57 × 150 | ZS1GF02N1D16 | 2.5 |
| | 16 | 4.8 | 0 | 10 | 6 | 10 | 6 | | | 120 | G | 27 | 22 | 69 × 57 × 150 | ZS1GF02E1D16 | 2.5 |
| | 16 | 4.8 | 0 | 10 | 6 | 10 | 6 | 7 | 4 | 120 | G | 27 | 22 | 69 × 57 × 150 | ZS1GF02V1D16 | 2.5 |
| 3/4 " | 20 | 7.6 | 0 | 10 | 6 | 10 | 6 | 7 | 4 | 80 | G | 27 | 22 | 73 × 57 × 158 | ZS1GF02N1E20 | 2.7 |
| | 20 | 7.6 | 0 | 10 | 6 | 10 | 6 | | | 120 | G | 27 | 22 | 73 × 57 × 158 | ZS1GF02E1E20 | 2.7 |
| | 20 | 7.6 | 0 | 10 | 6 | 10 | 6 | 7 | 4 | 120 | G | 27 | 22 | 73 × 57 × 158 | ZS1GF02V1E20 | 2.7 |
| 1 " | 20 | 7.6 | 0 | 10 | 6 | 10 | 6 | 7 | 4 | 80 | G | 27 | 22 | 80 × 62 × 161 | ZS1GF02N1G20 | 2.8 |
| | 20 | 7.6 | 0 | 10 | 6 | 10 | 6 | | | 120 | G | 27 | 22 | 80 × 62 × 161 | ZS1GF02E1G20 | 2.8 |
| | 20 | 7.6 | 0 | 10 | 6 | 10 | 6 | 7 | 4 | 120 | G | 27 | 22 | 80 × 62 × 161 | ZS1GF02V1G20 | 2.8 |
| | 25 | 12 | 0 | 10 | 6 | 10 | 6 | | | 80 | G | 27 | 22 | 99 × 77 × 165 | ZS1GF02N1G25 | 3.0 |
| | 25 | 12 | 0 | 10 | 6 | 10 | 6 | 7 | 4 | 120 | G | 27 | 22 | 99 × 77 × 165 | ZS1GF02E1G25 | 3.0 |
| | 25 | 12 | 0 | 10 | 6 | 10 | 6 | | | 120 | G | 27 | 22 | 99 × 77 × 165 | ZS1GF02V1G25 | 3.0 |

# ZS Series 2/2-way Zero Press Differential(Stainless steel) Flameproof Solenoid Valve<Normally Closed>

## Product Feature

2/2 way normally closed solenoid valve, closed when de-energized open , open when energized

Working pressure：0~10kgf/cm$^2$

Body material：SS304

Ambient temp：-20℃~+55℃ Medium temperature：0℃~+120℃

Atmospheric pressure：80~110kpa Relative humidity：≤95%(+25℃)

Voltage：AC220V 、DC24V(Other voltage can ask the company)

Seals：NBR、EPDM、VITON

Flame-proof grade：Ex d IIB T4 Gb

Explosion-proof standard ：GB3836.1、GB3836.2。

It is suitable for other explosive gas environment except coal mine gas and the place containing Ⅱ A, Ⅱ B T1~T4 explosive gas environment zone 1 and 2

Flow as the arrow ,mounts in any position ; best position is solenoid vertical and upright direction

Specifications for thread of cable outlet device:M20x1.5
If the cable protective cover needs to be installed, the certified explosion-proof connector must be used



## External Dimensions

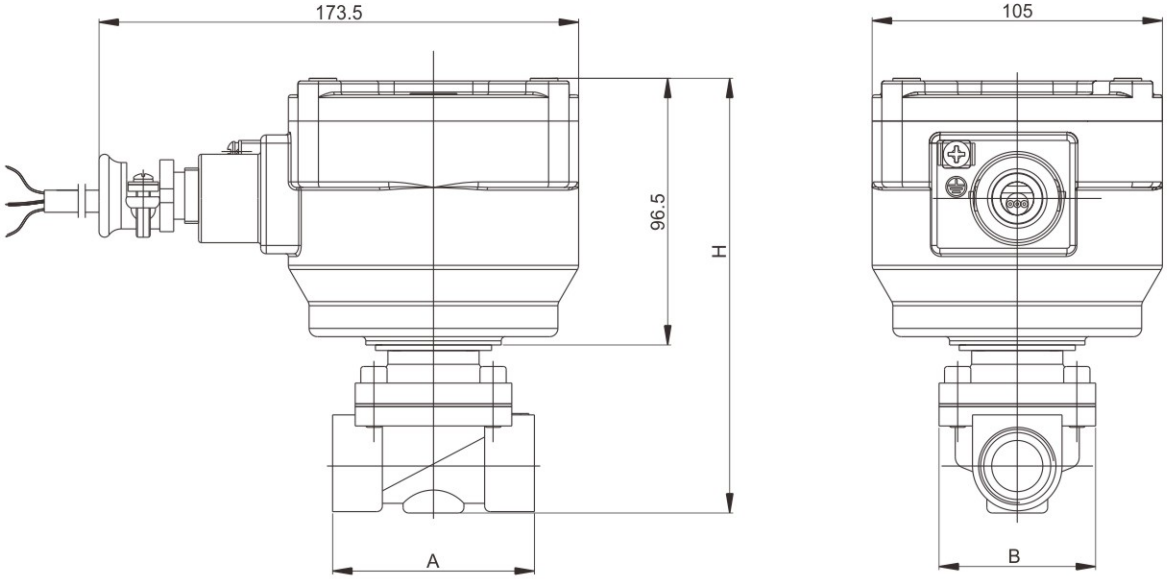

# ZS Series 2/2-way Zero Press Differential(Stainless steel) Flameproof Solenoid Valve<Normally Closed>

## Valve Selection List

| Pipe Size | Orifice mm | CV Factor | Operating pressure differential(kgf/cm²) | | | | | | | Max. fluids Temp. ℃ | Coil Type | Power consumption | | External Dimensions Length x Width x Height Lx B x H | Model Code 220VAC | Weight KG |
|---|---|---|---|---|---|---|---|---|---|---|---|---|---|---|---|---|
| | | | Min. | Max. | | | | | | | | VA | W | | | |
| | | | | Air Gas | | Water Hot water Liquid | | Light oil | | | | AC 220V | DC 24V | | | |
| | | | | AC | DC | AC | DC | AC | DC | | | | | | | |
| 3/8 " | 16 | 4.8 | 0 | 10 | 6 | 10 | 6 | 7 | 4 | 80 | G | 27 | 22 | 69 × 57 × 150 | ZS1GF02N4C16 | 2.5 |
| | 16 | 4.8 | 0 | 10 | 6 | 10 | 6 | | | 120 | G | 27 | 22 | 69 × 57 × 150 | ZS1GF02E4C16 | 2.5 |
| | 16 | 4.8 | 0 | 10 | 6 | 10 | 6 | 7 | 4 | 120 | G | 27 | 22 | 69 × 57 × 150 | ZS1GF02V4C16 | 2.5 |
| 1/2 " | 16 | 4.8 | 0 | 10 | 6 | 10 | 6 | 7 | 4 | 80 | G | 27 | 22 | 69 × 57 × 150 | ZS1GF02N4D16 | 2.5 |
| | 16 | 4.8 | 0 | 10 | 6 | 10 | 6 | | | 120 | G | 27 | 22 | 69 × 57 × 150 | ZS1GF02E4D16 | 2.5 |
| | 16 | 4.8 | 0 | 10 | 6 | 10 | 6 | 7 | 4 | 120 | G | 27 | 22 | 69 × 57 × 150 | ZS1GF02V4D16 | 2.5 |
| 3/4 " | 20 | 7.6 | 0 | 10 | 6 | 10 | 6 | 7 | 4 | 80 | G | 27 | 22 | 73 × 57 × 158 | ZS1GF02N4E20 | 2.7 |
| | 20 | 7.6 | 0 | 10 | 6 | 10 | 6 | | | 120 | G | 27 | 22 | 73 × 57 × 158 | ZS1GF02E4E20 | 2.7 |
| | 20 | 7.6 | 0 | 10 | 6 | 10 | 6 | 7 | 4 | 120 | G | 27 | 22 | 73 × 57 × 158 | ZS1GF02V4E20 | 2.7 |
| 1 " | 20 | 7.6 | 0 | 10 | 6 | 10 | 6 | 7 | 4 | 80 | G | 27 | 22 | 80 × 62 × 161 | ZS1GF02N4G20 | 2.8 |
| | 20 | 7.6 | 0 | 10 | 6 | 10 | 6 | | | 120 | G | 27 | 22 | 80 × 62 × 161 | ZS1GF02E4G20 | 2.8 |
| | 20 | 7.6 | 0 | 10 | 6 | 10 | 6 | 7 | 4 | 120 | G | 27 | 22 | 80 × 62 × 161 | ZS1GF02V4G20 | 2.8 |
| | 25 | 12 | 0 | 10 | 6 | 10 | 6 | | | 80 | G | 27 | 22 | 99 × 77 × 165 | ZS1GF02N4G25 | 3.0 |
| | 25 | 12 | 0 | 10 | 6 | 10 | 6 | 7 | 4 | 120 | G | 27 | 22 | 99 × 77 × 165 | ZS1GF02E4G25 | 3.0 |
| | 25 | 12 | 0 | 10 | 6 | 10 | 6 | | | 120 | G | 27 | 22 | 99 × 77 × 165 | ZS1GF02V4G25 | 3.0 |

# ZS Stainless Steel Flange Series Flameproof Solenoid Valve<Normally Closed>

## Valve Selection List

| Orifice mm | CV Factor | Operating pressure differential(kgf/cm²) Min. | Max. Air Gas AC | Max. Air Gas DC | Max. Water Hot water Liquid AC | Max. Water Hot water Liquid DC | Max. Light oil AC | Max. Light oil DC | Max. fluids Temp. ℃ | Coil Type | Power consumption VA AC 220V | Power consumption W DC 24 | Coil Class | Model Code 220VAC V | Weight KG |
|---|---|---|---|---|---|---|---|---|---|---|---|---|---|---|---|
| 15 | 4.8 | 0 | 10 | 6 | 10 | 6 | 7 | 4 | 80 | G | 27 | 22 | F | ZS1GF02N4F15 | 3.4 |
| 15 | 4.8 | 0 | 10 | 6 | 10 | 6 | | | 120 | G | 27 | 22 | F | ZS1GF02E4F15 | 3.4 |
| 15 | 4.8 | 0 | 10 | 6 | 10 | 6 | 7 | 4 | 120 | G | 27 | 22 | F | ZS1GF02V4F15 | 3.4 |
| 20 | 7.6 | 0 | 10 | 6 | 10 | 6 | 7 | 4 | 80 | G | 27 | 22 | F | ZS1GF02N4F20 | 3.6 |
| 20 | 7.6 | 0 | 10 | 6 | 10 | 6 | | | 120 | G | 27 | 22 | F | ZS1GF02E4F20 | 3.6 |
| 20 | 7.6 | 0 | 10 | 6 | 10 | 6 | 7 | 4 | 120 | G | 27 | 22 | F | ZS1GF02V4F20 | 3.6 |
| 25 | 12 | 0 | 10 | 6 | 10 | 6 | 7 | 4 | 80 | G | 27 | 22 | F | ZS1GF02N4F25 | 4.5 |
| 25 | 12 | 0 | 10 | 6 | 10 | 6 | | | 120 | G | 27 | 22 | F | ZS1GF02E4F25 | 4.5 |
| 25 | 12 | 0 | 10 | 6 | 10 | 6 | 7 | 4 | 120 | G | 27 | 22 | F | ZS1GF02V4F25 | 4.5 |

## External Dimensions



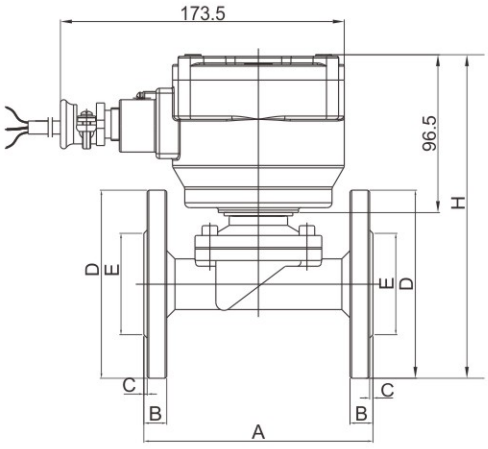


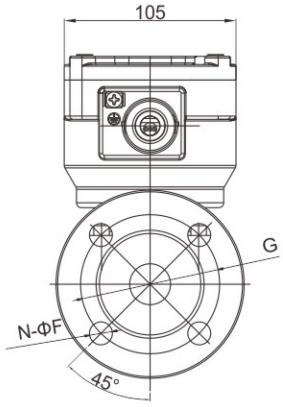


| Model | A | B | C | ΦD | ΦE | N-ΦF | ΦG | H |
|---|---|---|---|---|---|---|---|---|
| ZS-15BF | 106 | 12 | 2 | 95 | 45 | 4-14 | 65 | 199 |
| ZS-20BF | 106 | 12 | 2 | 102 | 56 | 4-14 | 75 | 202 |
| ZS-25BF | 140 | 14 | 2 | 115 | 62 | 4-14 | 85 | 198 |

# ZS Brass Series 2/2-way Zero Press Differential Flameproof Solenoid Valve<Normally Open>

## Product Feature

2/2 way normally open solenoid valve, open when de-energized open , closed when energized

Working pressure：0~5kgf/cm$^2$

Body material：Forged Brass

Ambient temp：-20℃~+55℃ Medium temperature：0℃~+120℃

Atmospheric pressure：80~110kpa Relative humidity：≤95%(+25℃)

Voltage：AC220V 、DC24V(Other voltage can ask the company)

Seals：NBR、EPDM、VITON

Flame-proof grade：Ex d IIB T4 Gb

Explosion-proof standard ：GB3836.1、GB3836.2。

It is suitable for other explosive gas environment except coal mine gas and the place containing Ⅱ A, Ⅱ B T1~T4 explosive gas environment zone 1 and 2

Flow as the arrow ,mounts in any position ; best position is solenoid vertical and upright direction

Specifications for thread of cable outlet device:M20x1.5
If the cable protective cover needs to be installed, the certified explosion-proof connector must be used



## External Dimensions

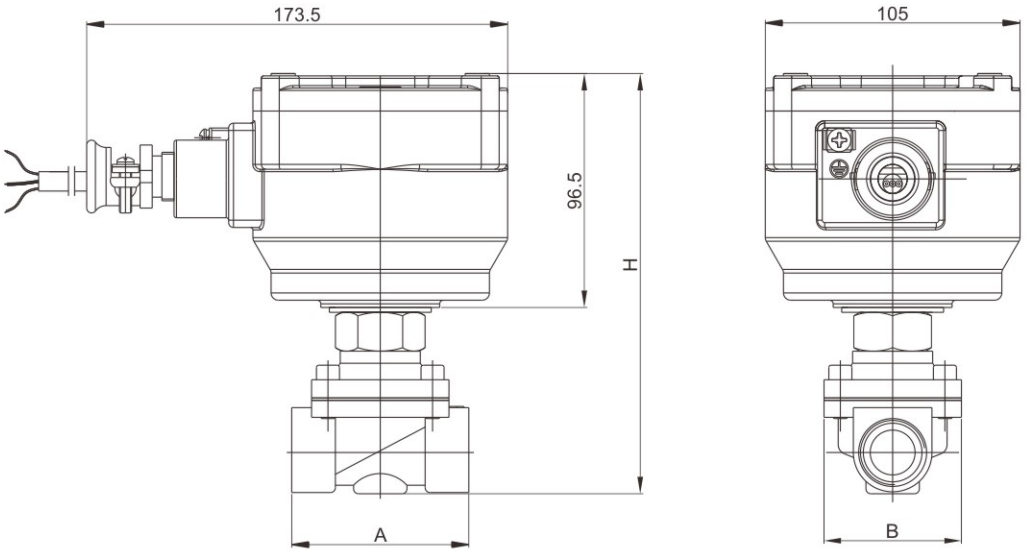

# ZS Brass Series 2/2-way Zero Press Differential Flameproof Solenoid Valve<Normally Open>

## Valve Selection List

| Pipe Size | Orifice mm | CV Factor | Operating pressure differential(kgf/cm²) | | | | | | | Max. fluids Temp. ℃ | Coil Type | Power consumption | | External Dimensions Length x Width x Height Lx B x H | Model Code 220VAC | Weight KG |
|---|---|---|---|---|---|---|---|---|---|---|---|---|---|---|---|---|
| | | | Min. | Max. | | | | | | | | VA | W | | | |
| | | | | Air Gas | | Water Hot water Liquid | | Light oil | | | | AC 220V | DC 24V | | | |
| | | | | AC | DC | AC | DC | AC | DC | | | | | | | |
| 3/8 " | 16 | 4.8 | 0 | 5 | 5 | 5 | 5 | 3 | 3 | 80 | G | 27 | 22 | 69 × 57 × 166 | ZS2GF02N1C16 | 2.8 |
| | 16 | 4.8 | 0 | 5 | 5 | 5 | 5 | | | 120 | G | 27 | 22 | 69 × 57 × 166 | ZS2GF02E1C16 | 2.8 |
| | 16 | 4.8 | 0 | 5 | 5 | 5 | 5 | 3 | 3 | 120 | G | 27 | 22 | 69 × 57 × 166 | ZS2GF02V1C16 | 2.8 |
| 1/2 " | 16 | 4.8 | 0 | 5 | 5 | 5 | 5 | 3 | 3 | 80 | G | 27 | 22 | 69 × 57 × 166 | ZS2GF02N1D16 | 2.8 |
| | 16 | 4.8 | 0 | 5 | 5 | 5 | 5 | | | 120 | G | 27 | 22 | 69 × 57 × 166 | ZS2GF02E1D16 | 2.8 |
| | 16 | 4.8 | 0 | 5 | 5 | 5 | 5 | 3 | 3 | 120 | G | 27 | 22 | 69 × 57 × 166 | ZS2GF02V1D16 | 2.8 |
| 3/4 " | 20 | 7.6 | 0 | 5 | 5 | 5 | 5 | 3 | 3 | 80 | G | 27 | 22 | 73 × 57 × 174 | ZS2GF02N1E20 | 3.0 |
| | 20 | 7.6 | 0 | 5 | 5 | 5 | 5 | | | 120 | G | 27 | 22 | 73 × 57 × 174 | ZS2GF02E1E20 | 3.0 |
| | 20 | 7.6 | 0 | 5 | 5 | 5 | 5 | 3 | 3 | 120 | G | 27 | 22 | 73 × 57 × 174 | ZS2GF02V1E20 | 3.0 |
| 1 " | 20 | 7.6 | 0 | 5 | 5 | 5 | 5 | 3 | 3 | 80 | G | 27 | 22 | 80 × 62 × 177 | ZS2GF02N1G20 | 3.1 |
| | 20 | 7.6 | 0 | 5 | 5 | 5 | 5 | | | 120 | G | 27 | 22 | 80 × 62 × 177 | ZS2GF02E1G20 | 3.1 |
| | 20 | 7.6 | 0 | 5 | 5 | 5 | 5 | 3 | 3 | 120 | G | 27 | 22 | 80 × 62 × 177 | ZS2GF02V1G20 | 3.1 |
| | 25 | 12 | 0 | 5 | 5 | 5 | 5 | 3 | 3 | 80 | G | 27 | 22 | 99 × 77 × 182 | ZS2GF02N1G25 | 3.4 |
| | 25 | 12 | 0 | 5 | 5 | 5 | 5 | | | 120 | G | 27 | 22 | 99 × 77 × 182 | ZS2GF02E1G25 | 3.4 |
| | 25 | 12 | 0 | 5 | 5 | 5 | 5 | 3 | 3 | 120 | G | 27 | 22 | 99 × 77 × 182 | ZS2GF02V1G25 | 3.4 |

# ZS Stainless steel Series 2/2-way Zero Press Differential Flameproof Solenoid Valve<Normally Open>

## Product Feature

2/2 way normally open solenoid valve, open when de-energized open , closed when energized

Working pressure：0~5kgf/cm

Body material：SS304

Ambient temp：-20℃~+55℃ Medium temperature：0℃~+120℃

Atmospheric pressure：80~110kpa Relative humidity：≤95%(+25℃)

Voltage：AC220V 、DC24V(Other voltage can ask the company)

Seals：NBR、EPDM、VITON

Flame-proof grade：Ex d IIB T4 Gb

Explosion-proof standard ：GB3836.1、GB3836.2。

It is suitable for other explosive gas environment except coal mine gas and the place containing Ⅱ A, Ⅱ B T1~T4 explosive gas environment zone 1 and 2

Flow as the arrow ,mounts in any position ; best position is solenoid vertical and upright direction

Specifications for thread of cable outlet device:M20x1.5
If the cable protective cover needs to be installed, the certified explosion-proof connector must be used



## External Dimensions

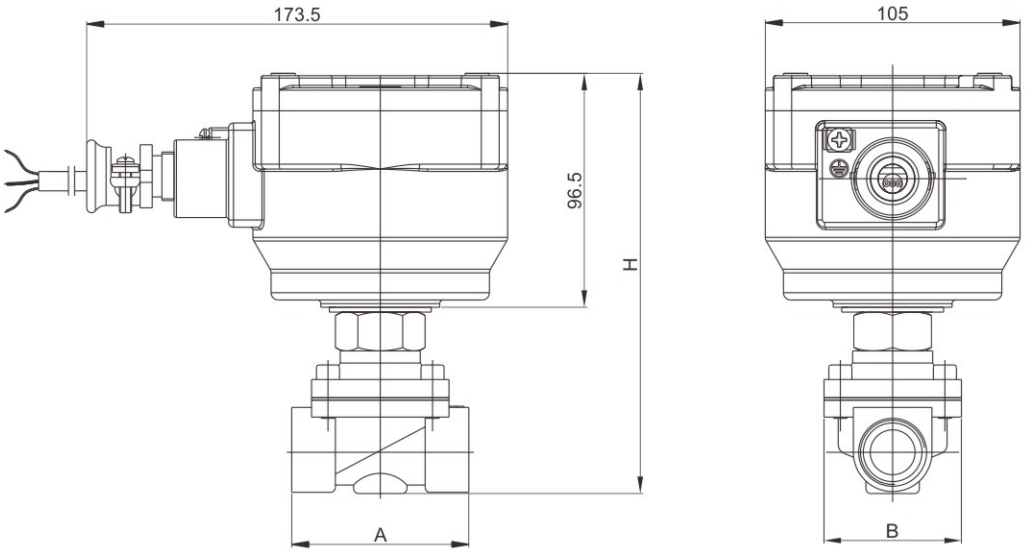

# ZS Stainless steel Series 2/2-way Zero Press Differential Flameproof Solenoid Valve<Normally Open>

## Valve Selection List

| Pipe Size | Orifice mm | CV Factor | Operating pressure differential(kgf/cm²) | | | | | | | Max. fluids Temp. ℃ | Coil Type | Power consumption | | External Dimensions Length x Width x Height Lx B x H | Model Code 220VAC | Weight KG |
|---|---|---|---|---|---|---|---|---|---|---|---|---|---|---|---|---|
| | | | Min. | Max. | | | | | | | | VA | W | | | |
| | | | | Air Gas | | Water Hot water Liquid | | Light oil | | | | AC 220V | DC 24V | | | |
| | | | | AC | DC | AC | DC | AC | DC | | | | | | | |
| 3/8 " | 16 | 4.8 | 0 | 5 | 5 | 5 | 5 | 3 | 3 | 80 | G | 27 | 22 | 69 × 57 × 166 | ZS2GF02N4C16 | 2.7 |
| | 16 | 4.8 | 0 | 5 | 5 | 5 | 5 | | | 120 | G | 27 | 22 | 69 × 57 × 166 | ZS2GF02E4C16 | 2.7 |
| | 16 | 4.8 | 0 | 5 | 5 | 5 | 5 | 3 | 3 | 120 | G | 27 | 22 | 69 × 57 × 166 | ZS2GF02V4C16 | 2.7 |
| 1/2 " | 16 | 4.8 | 0 | 5 | 5 | 5 | 5 | 3 | 3 | 80 | G | 27 | 22 | 69 × 57 × 166 | ZS2GF02N4D16 | 2.7 |
| | 16 | 4.8 | 0 | 5 | 5 | 5 | 5 | | | 120 | G | 27 | 22 | 69 × 57 × 166 | ZS2GF02E4D16 | 2.7 |
| | 16 | 4.8 | 0 | 5 | 5 | 5 | 5 | 3 | 3 | 120 | G | 27 | 22 | 69 × 57 × 166 | ZS2GF02V4D16 | 2.7 |
| 3/4 " | 20 | 7.6 | 0 | 5 | 5 | 5 | 5 | 3 | 3 | 80 | G | 27 | 22 | 73 × 57 × 174 | ZS2GF02N4E20 | 2.8 |
| | 20 | 7.6 | 0 | 5 | 5 | 5 | 5 | | | 120 | G | 27 | 22 | 73 × 57 × 174 | ZS2GF02E4E20 | 2.8 |
| | 20 | 7.6 | 0 | 5 | 5 | 5 | 5 | 3 | 3 | 120 | G | 27 | 22 | 73 × 57 × 174 | ZS2GF02V4E20 | 2.8 |
| 1 " | 20 | 7.6 | 0 | 5 | 5 | 5 | 5 | 3 | 3 | 80 | G | 27 | 22 | 80 × 62 × 177 | ZS2GF02N4G20 | 2.9 |
| | 20 | 7.6 | 0 | 5 | 5 | 5 | 5 | | | 120 | G | 27 | 22 | 80 × 62 × 177 | ZS2GF02E4G20 | 2.9 |
| | 20 | 7.6 | 0 | 5 | 5 | 5 | 5 | 3 | 3 | 120 | G | 27 | 22 | 80 × 62 × 177 | ZS2GF02V4G20 | 2.9 |
| | 25 | 12 | 0 | 5 | 5 | 5 | 5 | 3 | 3 | 80 | G | 27 | 22 | 99 × 77 × 182 | ZS2GF02N4G25 | 3.3 |
| | 25 | 12 | 0 | 5 | 5 | 5 | 5 | | | 120 | G | 27 | 22 | 99 × 77 × 182 | ZS2GF02E4G25 | 3.3 |
| | 25 | 12 | 0 | 5 | 5 | 5 | 5 | 3 | 3 | 120 | G | 27 | 22 | 99 × 77 × 182 | ZS2GF02V4G25 | 3.3 |

# ZS Stainless steel Series 2/2-way Zero Press Differential Flameproof Solenoid Valve<Normally Open>

## Valve Selection List

| Orifice mm | CV Factor | Operating pressure differential(kgf/cm²) Min. | Max. Air Gas AC | Max. Air Gas DC | Max. Water Hot water Liquid AC | Max. Water Hot water Liquid DC | Max. Light oil AC | Max. Light oil DC | Max. fluids Temp. ℃ | Coil Type | Power consumption VA AC 220V | Power consumption W DC 24 | Coil Class | Model Code 220VAC V | Weight KG |
|---|---|---|---|---|---|---|---|---|---|---|---|---|---|---|---|
| 15 | 4.8 | 0 | 5 | 5 | 5 | 5 | 3 | 3 | 80 | G | 27 | 22 | F | ZS2GF02N4F15 | 3.6 |
| 15 | 4.8 | 0 | 5 | 5 | 5 | 5 | | | 120 | G | 27 | 22 | F | ZS2GF02E4F15 | 3.6 |
| 15 | 4.8 | 0 | 5 | 5 | 5 | 5 | 3 | 3 | 120 | G | 27 | 22 | F | ZS2GF02V4F15 | 3.6 |
| 20 | 7.6 | 0 | 5 | 5 | 5 | 5 | 3 | 3 | 80 | G | 27 | 22 | F | ZS2GF02N4F20 | 3.8 |
| 20 | 7.6 | 0 | 5 | 5 | 5 | 5 | | | 120 | G | 27 | 22 | F | ZS2GF02E4F20 | 3.8 |
| 20 | 7.6 | 0 | 5 | 5 | 5 | 5 | 3 | 3 | 120 | G | 27 | 22 | F | ZS2GF02V4F20 | 3.8 |
| 25 | 12 | 0 | 5 | 5 | 5 | 5 | 3 | 3 | 80 | G | 27 | 22 | F | ZS2GF02N4F25 | 4.7 |
| 25 | 12 | 0 | 5 | 5 | 5 | 5 | | | 120 | G | 27 | 22 | F | ZS2GF02E4F25 | 4.7 |
| 25 | 12 | 0 | 5 | 5 | 5 | 5 | 3 | 3 | 120 | G | 27 | 22 | F | ZS2GF02V4F25 | 4.7 |

## External Dimensions



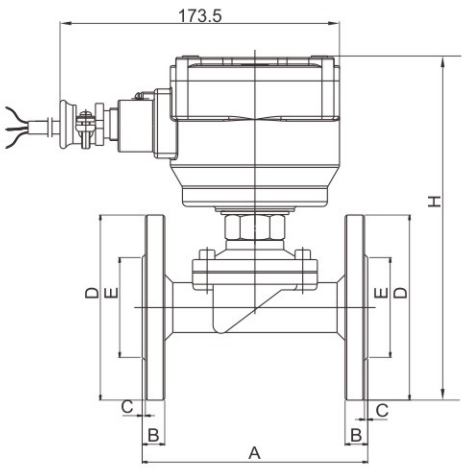


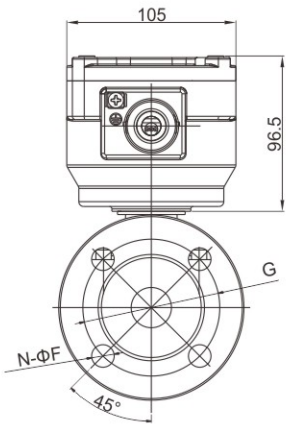


| Model | A | B | C | ΦD | ΦE | N−ΦF | ΦG | H |
|---|---|---|---|---|---|---|---|---|
| ZS2−15BF | 106 | 12 | 2 | 95 | 45 | 4−14 | 65 | 202 |
| ZS2−20BF | 106 | 12 | 2 | 102 | 56 | 4−14 | 75 | 205 |
| ZS2−25BF | 140 | 14 | 2 | 115 | 62 | 4−14 | 85 | 214 |

# SLP Series 2/2-way Flameproof Solenoid Valve

## Product Feature

Products for serialized production, high pressure, large flow, wide range of application

Body material:：Forged Brass、SS304、SS316

Ambient temp：-20℃~+55℃ Medium temperature：0℃~+120℃

Atmospheric pressure：80~110kpa Relative humidity：≤95%(+25℃)

Voltage：AC220V 、DC24V(Other voltage can ask the company)

Seals：NBR、EPDM、VITON

Flame-proof grade：Ex d IIB T4 Gb

Explosion-proof standard：GB3836.1、GB3836.2。

Temperature lever T4:Safe object surface temperature ≤135℃

It is suitable for other explosive gas environment except coal mine gas and the place containing Ⅱ A, Ⅱ B T1~T4 explosive gas environment zone 1 and 2

Flow as the arrow ,mounts in any position ; best position is solenoid vertical and upright direction

Specifications for thread of cable outlet device:M20x1.5
If the cable protective cover needs to be installed, the certified explosion-proof connector must be used

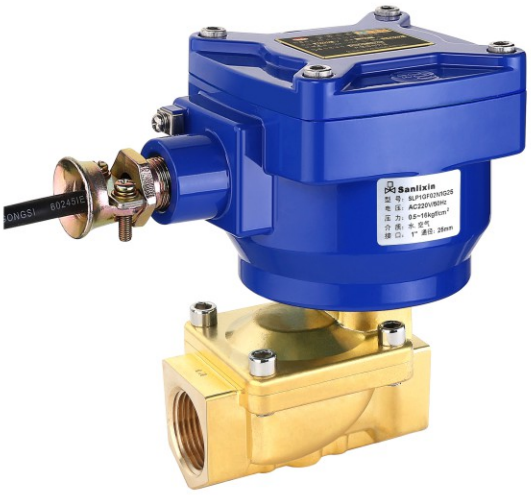

## Solenoid Valves Numbering System for Order

| 1 | 2 | 3 | 4 | 5 | 6 | 7 | 8 | 9 | 10 |
|---|---|---|---|---|---|---|---|---|---|
| Valve Series | Mode of Operation | Coil Type | Coil Class | Voltage | Seal Material | Body Material | Pipe Size | Orifice (mm) | Options |
| SLP | 1 | G | F | 02 | N | 9 | B | 10 | |
| | 1=Normally Closed<br>2=Normally Open | G=Flameproof coil | F=F grade | 02=AC220V<br>13=DC24V<br>Other voltage can ask the company | N=NBR<br>E=EPDM<br>V=VITON | 1=Forged Brass<br>3=SS304<br>4=SS304 | A=1/8 "<br>B=1/4 " | 01=1.0<br>C1=1.2<br>C2=1.5<br>02=2.0<br>C3=2.5<br>03=3.0 | N=NPT |
| | | | | | | | C=3/8 " | 03=3.0<br>04=4.0 | |
| | | | | | | | B=1/4 "<br>C=3/8 "<br>D=1/2 " | 10=10.0<br>C9=10.5 | |
| | | | | | | | C=3/8 "<br>D=1/2 " | 13=13.0 | |
| | | | | | | | E=3/4 " | 20=20.0 | |
| | | | | | | | G=1 " | 20=20.0<br>25=25.0 | |
| | | | | | | | H=1-1/4 " | 32=32.0 | |
| | | | | | | | J=1-1/2 " | 40=40.0 | |
| | | | | | | | K=2 " | 40=40.0<br>50=50.0 | |
| | | | | | | 3=SS316<br>4=SS304 | F=Flange connection | 25=25.0<br>35=35.0<br>40=40.0<br>50=50.0<br>65=65.0<br>80=80.0<br>100=100.0 | |
| | | | | | | 9=Forged Brass<br>5=SS316<br>Use for normally open small size valve | A=1/8 "<br>B=1/4 " | 01=1.0<br>C2=1.5<br>C3=1.5<br>03=3.0<br>04=4.0 | |

# SLP Compact Series 2/2-way Direct Acting Flameproof Solenoid Valve <Normally Closed>

## Product Feature

2/2 way normally closed solenoid valve, closed when de-energized open , open when energized

Working pressure：0~30kgf/cm²

Body material：Forged Brass、SS316

Ambient temp：-20℃~+55℃ Medium temperature：0℃~+120℃

Atmospheric pressure：80~110kpa Relative humidity：≤95%(+25℃)

Voltage：AC220V DC24V(Other voltage can ask the company)

Seals：NBR、EPDM、VITON

Flame-proof grade：Ex d IIB T4 Gb

Explosion-proof standard：GB3836.1、GB3836.2。

It is suitable for other explosive gas environment except coal mine gas and the place containing Ⅱ A, Ⅱ B T1~T4 explosive gas environment zone 1 and 2

Flow as the arrow ,mounts in any position ; best position is solenoid vertical and upright direction

Specifications for thread of cable outlet device:M20x1.5
If the cable protective cover needs to be installed, the certified explosion-proof connector must be used




## External Dimensions

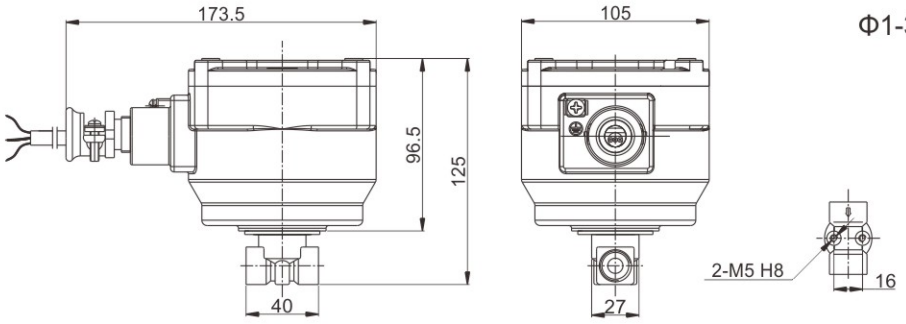


Φ1-3mm （1/8、1/4）

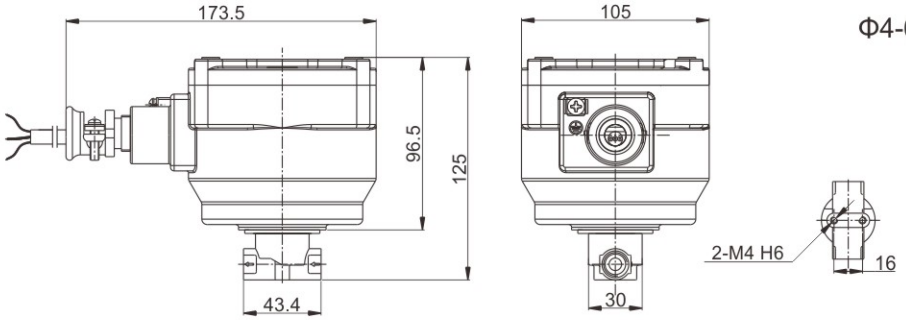


Φ4-6mm （1/8、1/4）

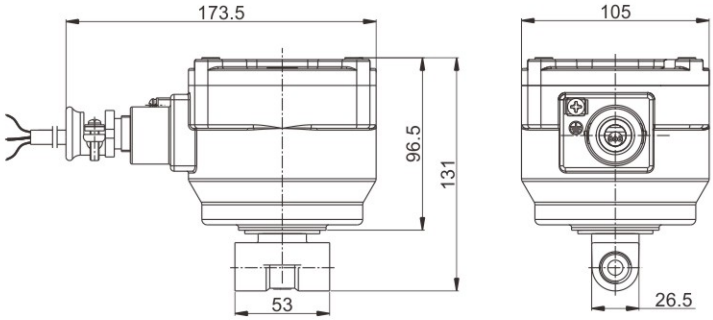


Φ5-6mm （3/8、1/2）

# SLP Compact Series 2/2-way Direct Acting Flameproof Solenoid Valve <Normally Closed>





## Valve Selection List

| Pipe Size | Orifice mm | CV Factor | Operating pressure differential(kgf/cm²) | | | | | | | Max. fluids Temp. ℃ | Coil Type | Power consumption | | Model Code 220VAC NBR | | Weight KG |
|---|---|---|---|---|---|---|---|---|---|---|---|---|---|---|---|---|
| | | | Min. | Max. | | | | | | | | VA | W | | | |
| | | | | Air Gas | | Water Hot water Liquid | | Light oil | | | | AC 220V | DC 24V | Body material | | |
| | | | | AC | DC | AC | DC | AC | DC | | | | | Forged brass | SS316 | |
| 1/8 " | 1.0 | 0.04 | 0 | 30 | 30 | 30 | 30 | 30 | 30 | 80 | G | 27 | 22 | SLP1GF02N1A01 | SLP1GF02N3A01 | 2.1 |
| | 1.2 | 0.05 | 0 | 30 | 30 | 30 | 30 | 30 | 30 | 80 | G | 27 | 22 | SLP1GF02N1AC1 | SLP1GF02N3AC1 | 2.1 |
| | 1.5 | 0.08 | 0 | 30 | 30 | 30 | 30 | 30 | 30 | 80 | G | 27 | 22 | SLP1GF02N1AC2 | SLP1GF02N3AC2 | 2.1 |
| | 2.0 | 0.14 | 0 | 30 | 30 | 30 | 30 | 30 | 30 | 80 | G | 27 | 22 | SLP1GF02N1A02 | SLP1GF02N3A02 | 2.1 |
| | 2.5 | 0.21 | 0 | 20 | 15 | 20 | 15 | 15 | 10 | 80 | G | 27 | 22 | SLP1GF02N1AC3 | SLP1GF02N3AC3 | 2.1 |
| | 3 | 0.23 | 0 | 13 | 13 | 13 | 13 | 10 | 10 | 80 | G | 27 | 22 | SLP1GF02N1A03 | SLP1GF02N3A03 | 2.1 |
| 1/4 " | 1.0 | 0.04 | 0 | 30 | 30 | 30 | 30 | 30 | 30 | 80 | G | 27 | 22 | SLP1GF02N1B01 | SLP1GF02N3B01 | 2.0 |
| | 1.2 | 0.05 | 0 | 30 | 30 | 30 | 30 | 30 | 30 | 80 | G | 27 | 22 | SLP1GF02N1BC1 | SLP1GF02N3BC1 | 2.0 |
| | 1.5 | 0.08 | 0 | 30 | 30 | 30 | 30 | 30 | 30 | 80 | G | 27 | 22 | SLP1GF02N1BC2 | SLP1GF02N3BC2 | 2.0 |
| | 2.0 | 0.14 | 0 | 30 | 30 | 30 | 30 | 30 | 30 | 80 | G | 27 | 22 | SLP1GF02N1B02 | SLP1GF02N3B02 | 2.0 |
| | 2.5 | 0.21 | 0 | 20 | 15 | 20 | 15 | 15 | 10 | 80 | G | 27 | 22 | SLP1GF02N1BC3 | SLP1GF02N3BC3 | 2.0 |
| | 3 | 0.23 | 0 | 13 | 13 | 13 | 13 | 10 | 10 | 80 | G | 27 | 22 | SLP1GF02N1B03 | SLP1GF02N3B03 | 2.0 |

# SLP Compact Series 2/2-way Direct Acting Flameproof Solenoid Valve <Normally Closed>

## Valve Selection List

| Pipe Size | Orifice mm | CV Factor | Operating pressure differential(kgf/cm²) | | | | | | | Max. fluids Temp. ℃ | Coil Type | Power consumption | | Model Code 220VAC NBR | | Weight KG |
|---|---|---|---|---|---|---|---|---|---|---|---|---|---|---|---|---|
| | | | Min. | Max. | | | | | | | | VA | W | | | |
| | | | | Air Gas | | Water Hot water Liquid | | Light oil | | | | AC 220V | DC 24V | Body material | | |
| | | | | AC | DC | AC | DC | AC | DC | | | | | Forged brass | SS316 | |
| 1/8 " | 4 | 0.6 | 0 | 8 | 8 | 8 | 8 | 6 | 6 | 80 | G | 27 | 22 | SLP1GF02N1A03 | SLP1GF02N3A03 | 2.0 |
| | 4 | 0.6 | 0 | 8 | 8 | 8 | 8 | | | 120 | G | 27 | 22 | SLP1GF02E1A03 | SLP1GF02E3A03 | 2.0 |
| | 4 | 0.6 | 0 | 8 | 8 | 8 | 8 | 6 | 6 | 120 | G | 27 | 22 | SLP1GF02V1A03 | SLP1GF02V3A03 | 2.0 |
| | 5 | 0.65 | 0 | 4 | 2.5 | 4 | 2.5 | 2.5 | 2 | 80 | G | 27 | 22 | SLP1GF02N1A05 | SLP1GF02N3A05 | 2.0 |
| | 5 | 0.65 | 0 | 4 | 2.5 | 4 | 2.5 | 2.5 | 2 | 120 | G | 27 | 22 | SLP1GF02E1A05 | SLP1GF02E3A05 | 2.0 |
| | 5 | 0.65 | 0 | 4 | 2.5 | 4 | 2.5 | 2.5 | 2 | 120 | G | 27 | 22 | SLP1GF02V1A05 | SLP1GF02V3A05 | 2.0 |
| | 6 | 0.8 | 0 | 3 | 2 | 3 | 3 | 2.5 | 2 | 80 | G | 27 | 22 | SLP1GF02N1A06 | SLP1GF02N3A06 | 2.0 |
| | 6 | 0.8 | 0 | 3 | 2 | 3 | 3 | 2.5 | 2 | 120 | G | 27 | 22 | SLP1GF02E1A06 | SLP1GF02E3A06 | 2.0 |
| | 6 | 0.8 | 0 | 3 | 2 | 3 | 3 | 2.5 | 2 | 120 | G | 27 | 22 | SLP1GF02V1A06 | SLP1GF02V3A06 | 1.9 |
| 1/4 " | 4 | 0.6 | 0 | 8 | 8 | 8 | 8 | 6 | 6 | 80 | G | 27 | 22 | SLP1GF02N1B03 | SLP1GF02N3B03 | 1.9 |
| | 4 | 0.6 | 0 | 8 | 8 | 8 | 8 | | | 120 | G | 27 | 22 | SLP1GF02E1B03 | SLP1GF02E3B03 | 1.9 |
| | 4 | 0.6 | 0 | 8 | 8 | 8 | 8 | 6 | 6 | 120 | G | 27 | 22 | SLP1GF02V1B03 | SLP1GF02V3B03 | 1.9 |
| | 5 | 0.65 | 0 | 4 | 2.5 | 4 | 2.5 | 2.5 | 2 | 80 | G | 27 | 22 | SLP1GF02N1B05 | SLP1GF02N3B05 | 1.9 |
| | 5 | 0.65 | 0 | 4 | 2.5 | 4 | 2.5 | 2.5 | 2 | 120 | G | 27 | 22 | SLP1GF02E1B05 | SLP1GF02E3B05 | 1.9 |
| | 5 | 0.65 | 0 | 4 | 2.5 | 4 | 2.5 | 2.5 | 2 | 120 | G | 27 | 22 | SLP1GF02V1B05 | SLP1GF02V3B05 | 1.9 |
| | 6 | 0.8 | 0 | 3 | 2 | 3 | 3 | 2.5 | 2 | 80 | G | 27 | 22 | SLP1GF02N1B06 | SLP1GF02N3B06 | 1.9 |
| | 6 | 0.8 | 0 | 3 | 2 | 3 | 3 | 2.5 | 2 | 120 | G | 27 | 22 | SLP1GF02E1B06 | SLP1GF02E3B06 | 1.9 |
| | 6 | 0.8 | 0 | 3 | 2 | 3 | 3 | 2.5 | 2 | 120 | G | 27 | 22 | SLP1GF02V1B06 | SLP1GF02V3B06 | 1.9 |
| 3/8 " | 5 | 0.65 | 0 | 4 | 2.5 | 4 | 2.5 | 2.5 | 2 | 80 | G | 27 | 22 | SLP1GF02N1C05 | SLP1GF02N3C05 | 2.2 |
| | 5 | 0.65 | 0 | 4 | 2.5 | 4 | 2.5 | 2.5 | 2 | 120 | G | 27 | 22 | SLP1GF02E1C05 | SLP1GF02E3C05 | 2.2 |
| | 5 | 0.65 | 0 | 4 | 2.5 | 4 | 2.5 | 2.5 | 2 | 120 | G | 27 | 22 | SLP1GF02V1C05 | SLP1GF02V3C05 | 2.2 |
| | 6 | 0.8 | 0 | 3 | 2 | 3 | 3 | 2.5 | 2 | 80 | G | 27 | 22 | SLP1GF02N1C06 | SLP1GF02N3C06 | 2.2 |
| | 6 | 0.8 | 0 | 3 | 2 | 3 | 3 | 2.5 | 2 | 120 | G | 27 | 22 | SLP1GF02E1C06 | SLP1GF02E3C06 | 2.2 |
| | 6 | 0.8 | 0 | 3 | 2 | 3 | 3 | 2.5 | 2 | 120 | G | 27 | 22 | SLP1GF02V1C06 | SLP1GF02V3C06 | 2.2 |
| 1/2 " | 5 | 0.65 | 0 | 4 | 2.5 | 4 | 2.5 | 2.5 | 2 | 80 | G | 27 | 22 | SLP1GF02N1D05 | SLP1GF02N3D05 | 2.1 |
| | 5 | 0.65 | 0 | 4 | 2.5 | 4 | 2.5 | 2.5 | 2 | 120 | G | 27 | 22 | SLP1GF02E1D05 | SLP1GF02E3D05 | 2.1 |
| | 5 | 0.65 | 0 | 4 | 2.5 | 4 | 2.5 | 2.5 | 2 | 120 | G | 27 | 22 | SLP1GF02V1D05 | SLP1GF02V3D05 | 2.1 |
| | 6 | 0.8 | 0 | 3 | 2 | 3 | 3 | 2.5 | 2 | 80 | G | 27 | 22 | SLP1GF02N1D06 | SLP1GF02N3D06 | 2.1 |
| | 6 | 0.8 | 0 | 3 | 2 | 3 | 3 | 2.5 | 2 | 120 | G | 27 | 22 | SLP1GF02E1D06 | SLP1GF02E3D06 | 2.1 |
| | 6 | 0.8 | 0 | 3 | 2 | 3 | 3 | 2.5 | 2 | 120 | G | 27 | 22 | SLP1GF02V1D06 | SLP1GF02V3D06 | 2.1 |

# SLP Small Series 2/2-way Direct Acting Flameproof Solenoid Valve <Normally Closed>

## Product Feature

2/2 way normally closed solenoid valve, closed when de-energized open , open when energized

Working pressure：0~13kgf/cm$^2$

Body material：Forged Brass、SS316

Ambient temp：-20℃~+55℃ Medium temperature：0℃~+120℃

Atmospheric pressure：80~110kpa Relative humidity：≤95%(+25℃)

Voltage：AC220V 、DC24V(Other voltage can ask the company)

Seals：NBR、EPDM、VITON

Flame-proof grade：Ex d IIB T4 Gb

Explosion-proof standard：GB3836.1、GB3836.2。

It is suitable for other explosive gas environment except coal mine gas and the place containing Ⅱ A, Ⅱ B T1~T4 explosive gas environment zone 1 and 2

Flow as the arrow ,mounts in any position ; best position is solenoid vertical and upright direction

Specifications for thread of cable outlet device:M20x1.5
If the cable protective cover needs to be installed, the certified explosion-proof connector must be used



## Valve Selection List

| Pipe Size | Orifice mm | CV Factor | Operating pressure differential(kgf/cm$^2$) | | | | | | | Max. fluids Temp. ℃ | Coil Type | Power consumption | | Model Code 220VAC | | Weight KG |
|---|---|---|---|---|---|---|---|---|---|---|---|---|---|---|---|---|
| | | | Min. | Max. | | | | | | | | VA | W | | | |
| | | | | Air | | Water Hot water Liquid | | Light oil | | | | AC 220V | DC 24V | Body material | | |
| | | | | AC | DC | AC | DC | AC | DC | | | | | Forged brass | SS316 | |
| 3/8 " | 3 | 0.3 | 0 | 13 | 13 | 13 | 13 | 10 | 10 | 80 | G | 27 | 22 | SLP1GF02N1C03 | SLP1GF02N3C03 | 2.0 |
| | 3 | 0.3 | 0 | 13 | 13 | 13 | 13 | | | 120 | G | 27 | 22 | SLP1GF02E1C03 | SLP1GF02E3C03 | 2.0 |
| | 3 | 0.3 | 0 | 13 | 13 | 13 | 13 | 10 | 10 | 120 | G | 27 | 22 | SLP1GF02V1C03 | SLP1GF02V3C03 | 2.0 |
| | 4 | 0.6 | 0 | 8 | 8 | 8 | 8 | 6 | 6 | 80 | G | 27 | 22 | SLP1GF02N1C04 | SLP1GF02N3C04 | 2.0 |
| | 4 | 0.6 | 0 | 8 | 8 | 8 | 8 | | | 120 | G | 27 | 22 | SLP1GF02E1C04 | SLP1GF02E3C04 | 2.0 |
| | 4 | 0.6 | 0 | 8 | 8 | 8 | 8 | 6 | 6 | 120 | G | 27 | 22 | SLP1GF02V1C04 | SLP1GF02V3C04 | 2.0 |

## External Dimensions

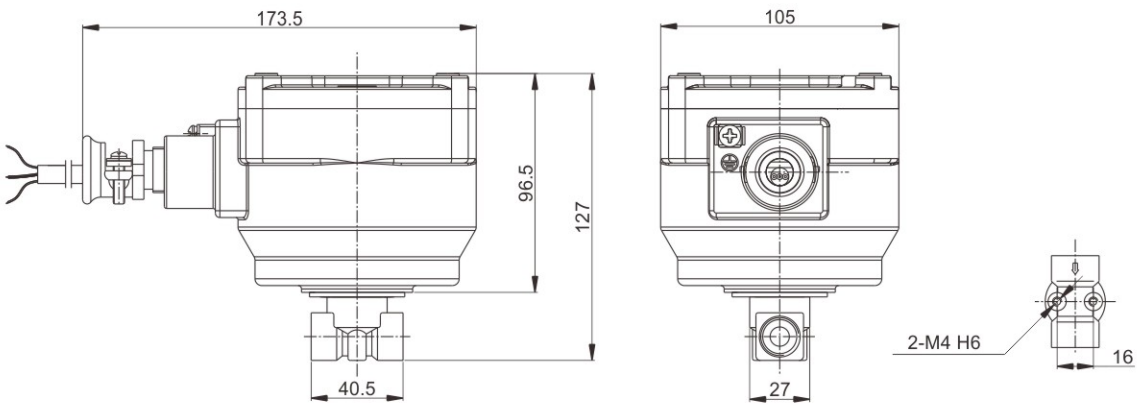

# SLP Compact Series 2/2-way Direct Acting Flameproof Solenoid Valve <Normally open>

## Product Feature

2/2 way normally open solenoid valve, open when de-energized open , closed when energized

Working pressure：0~30kgf/cm

Body material：Forged Brass、SS316

Ambient temp：-20℃~+55℃ Medium temperature：0℃~+120℃

Atmospheric pressure：80~110kpa Relative humidity：≤95%(+25℃)

Voltage：AC220V 、DC24V(Other voltage can ask the company)

Seals：NBR、EPDM、VITON

Flame-proof grade：Ex d IIB T4 Gb

Explosion-proof standard：GB3836.1、GB3836.2。

It is suitable for other explosive gas environment except coal mine gas and the place containing Ⅱ A, Ⅱ B T1~T4 explosive gas environment zone 1 and 2

Flow as the arrow ,mounts in any position ; best position is solenoid vertical and upright direction

Specifications for thread of cable outlet device:M20x1.5
If the cable protective cover needs to be installed, the certified explosion-proof connector must be used




**Normally open**

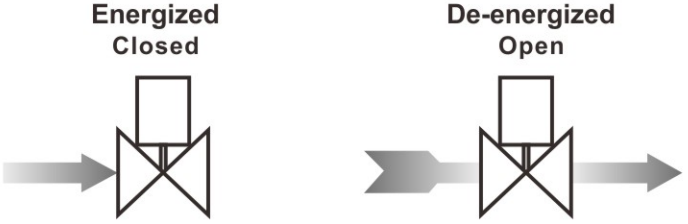


## External Dimensions

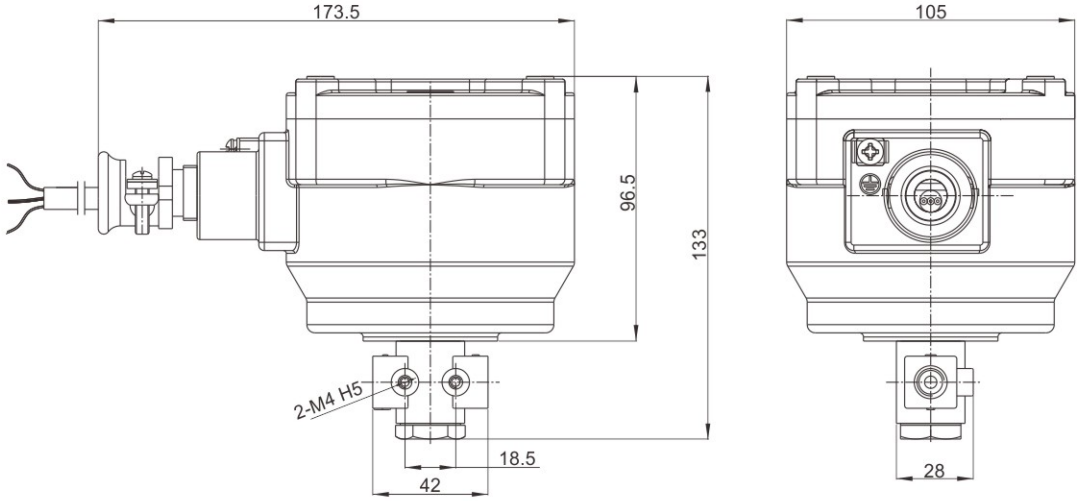

# SLP Compact Series 2/2-way Direct Acting Flameproof Solenoid Valve <Normally Open>

## Valve Selection List

| Pipe Size | Orifice mm | CV Factor | Operating pressure differential(kgf/cm²) | | | | Max. fluids Temp. ℃ | Coil Type | Power consumption | | Model Code 220VAC | | Weight KG |
|---|---|---|---|---|---|---|---|---|---|---|---|---|---|
| | | | Min. | Max. | | | | | VA | W | Body material | | |
| | | | | Air | Water Hot water Liquid | Light oil | | | AC 220V | DC 24V | Forged brass | Ss316 | |
| 1/8 " | 1 | 0.04 | 0 | 30 | 30 | 25 | 80 | G | 27 | 22 | SLP2GF02N9A01 | SLP2GF02N5A01 | 2.1 |
| | 1 | 0.04 | 0 | 30 | 30 | | 120 | G | 27 | 22 | SLP2GF02E9A01 | SLP2GF02E5A01 | 2.1 |
| | 1 | 0.04 | 0 | 30 | 30 | 25 | 120 | G | 27 | 22 | SLP2GF02V9A01 | SLP2GF02V5A01 | 2.1 |
| | 1.5 | 0.09 | 0 | 20 | 20 | 15 | 80 | G | 27 | 22 | SLP2GF02N9AC2 | SLP2GF02N5AC2 | 2.1 |
| | 1.5 | 0.09 | 0 | 20 | 20 | | 120 | G | 27 | 22 | SLP2GF02E9AC2 | SLP2GF02E5AC2 | 2.1 |
| | 1.5 | 0.09 | 0 | 20 | 20 | 15 | 120 | G | 27 | 22 | SLP2GF02V9AC2 | SLP2GF02V5AC2 | 2.1 |
| | 2.5 | 0.2 | 0 | 15 | 15 | 12 | 80 | G | 27 | 22 | SLP2GF02N9AC3 | SLP2GF02N5AC3 | 2.1 |
| | 2.5 | 0.2 | 0 | 15 | 15 | | 120 | G | 27 | 22 | SLP2GF02E9AC3 | SLP2GF02E5AC3 | 2.1 |
| | 2.5 | 0.2 | 0 | 15 | 15 | 12 | 120 | G | 27 | 22 | SLP2GF02V9AC3 | SLP2GF02V5AC3 | 2.1 |
| | 3 | 0.25 | 0 | 12 | 12 | 10 | 80 | G | 27 | 22 | SLP2GF02V9A03 | SLP2GF02V5A03 | 2.1 |
| | 3 | 0.25 | 0 | 12 | 12 | | 120 | G | 27 | 22 | SLP2GF02V9A03 | SLP2GF02V5A03 | 2.1 |
| | 3 | 0.25 | 0 | 12 | 12 | 10 | 120 | G | 27 | 22 | SLP2GF02V9A03 | SLP2GF02V5A03 | 2.1 |
| | 4 | 0.4 | 0 | 5 | 5 | 4 | 80 | G | 27 | 22 | SLP2GF02V9A04 | SLP2GF02V5A04 | 2.1 |
| | 4 | 0.4 | 0 | 5 | 5 | | 120 | G | 27 | 22 | SLP2GF02V9A04 | SLP2GF02V5A04 | 2.1 |
| | 4 | 0.4 | 0 | 5 | 5 | 4 | 120 | G | 27 | 22 | SLP2GF02V9A04 | SLP2GF02V5A04 | 2.1 |
| 1/4 " | 1 | 0.04 | 0 | 30 | 30 | 25 | 80 | G | 27 | 22 | SLP2GF02N9B01 | SLP2GF02N5B01 | 2.0 |
| | 1 | 0.04 | 0 | 30 | 30 | | 120 | G | 27 | 22 | SLP2GF02E9B01 | SLP2GF02E5B01 | 2.0 |
| | 1 | 0.04 | 0 | 30 | 30 | 25 | 120 | G | 27 | 22 | SLP2GF02V9B01 | SLP2GF02V5B01 | 2.0 |
| | 1.5 | 0.09 | 0 | 20 | 20 | 15 | 80 | G | 27 | 22 | SLP2GF02N9BC2 | SLP2GF02N5BC2 | 2.0 |
| | 1.5 | 0.09 | 0 | 20 | 20 | | 120 | G | 27 | 22 | SLP2GF02E9BC2 | SLP2GF02E5BC2 | 2.0 |
| | 1.5 | 0.09 | 0 | 20 | 20 | 15 | 120 | G | 27 | 22 | SLP2GF02V9BC2 | SLP2GF02V5BC2 | 2.0 |
| | 2.5 | 0.2 | 0 | 15 | 15 | 12 | 80 | G | 27 | 22 | SLP2GF02N9BC3 | SLP2GF02N5BC3 | 2.0 |
| | 2.5 | 0.2 | 0 | 15 | 15 | | 120 | G | 27 | 22 | SLP2GF02E9BC3 | SLP2GF02E5BC3 | 2.0 |
| | 2.5 | 0.2 | 0 | 15 | 15 | 12 | 120 | G | 27 | 22 | SLP2GF02V9BC3 | SLP2GF02V5BC3 | 2.0 |
| | 3 | 0.25 | 0 | 12 | 12 | 10 | 80 | G | 27 | 22 | SLP2GF02V9B03 | SLP2GF02V5B03 | 2.0 |
| | 3 | 0.25 | 0 | 12 | 12 | | 120 | G | 27 | 22 | SLP2GF02V9B03 | SLP2GF02V5B03 | 2.0 |
| | 3 | 0.25 | 0 | 12 | 12 | 10 | 120 | G | 27 | 22 | SLP2GF02V9B03 | SLP2GF02V5B03 | 2.0 |
| | 4 | 0.4 | 0 | 5 | 5 | 4 | 80 | G | 27 | 22 | SLP2GF02V9B04 | SLP2GF02V5B04 | 2.0 |
| | 4 | 0.4 | 0 | 5 | 5 | | 120 | G | 27 | 22 | SLP2GF02V9B04 | SLP2GF02V5B04 | 2.0 |
| | 4 | 0.4 | 0 | 5 | 5 | 4 | 120 | G | 27 | 22 | SLP2GF02V9B04 | SLP2GF02V5B04 | 2.0 |

# SLP Small Series 2/2-Way Pilot Operated (Brass) Flameproof Solenoid Valve <Normally Closed>

## Product Feature

2/2 way normally closed solenoid valve, closed when de-energized open , open when energized

Products for series production, small volume, large flow, wide range of application

Body material：Forged Brass Orifice：ϕ10.5mm

Ambient temp：-20℃~+55℃ Medium temperature：0℃~+120℃

Atmospheric pressure：80~110kpa Relative humidity：≤95%(+25℃)

Voltage：AC220V 、DC24V(Other voltage can ask the company)

Seals：NBR、EPDM、VITON

Flame-proof grade：Ex d IIB T4 Gb

Explosion-proof standard：GB3836.1、GB3836.2。

It is suitable for other explosive gas environment except coal mine gas and the place containing Ⅱ A, Ⅱ B T1~T4 explosive gas environment zone 1 and 2

Flow as the arrow ,mounts in any position ; best position is solenoid vertical and upright direction

Specifications for thread of cable outlet device:M20x1.5
If the cable protective cover needs to be installed, the certified explosion-proof connector must be used




## External Dimensions

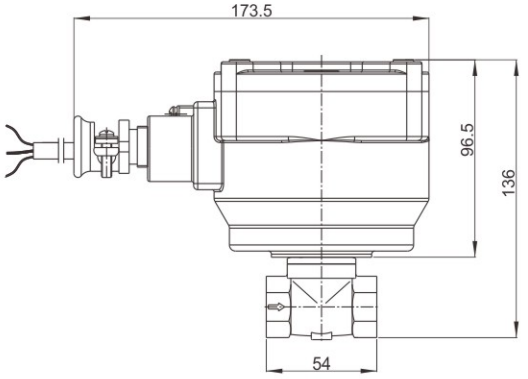


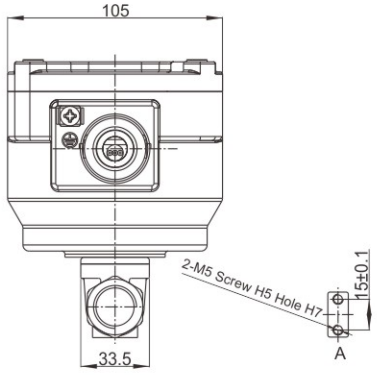


## Valve Selection List

| Pipe Size | Orifice mm | CV Factor | Operating pressure differential(kgf/cm²) Min. | Max. Air Gas AC | Max. Air Gas DC | Max. Water Hot water Liquid AC | Max. Water Hot water Liquid DC | Max. Light oil AC | Max. Light oil DC | Max. fluids Temp. ℃ | Coil Type | Power consumption VA AC 220V | Power consumption W DC 24V | Coil Grade | Model Code 220VAC | Weight KG |
|---|---|---|---|---|---|---|---|---|---|---|---|---|---|---|---|---|
| 1/4 " | 10.5 | 1.47 | 0.1 | 16 | 10 | 16 | 10 | 13 | 10 | 80 | G | 27 | 22 | F | SLP1GF02N1BC9 | 2.2 |
| | 10.5 | 1.47 | 0.1 | 16 | 10 | 16 | 10 | | | 120 | G | 27 | 22 | F | SLP1GF02E1BC9 | 2.2 |
| | 10.5 | 1.47 | 0.1 | 16 | 10 | 16 | 10 | 13 | 10 | 120 | G | 27 | 22 | F | SLP1GF02V1BC9 | 2.2 |
| 3/8 " | 10.5 | 1.68 | 0.1 | 16 | 10 | 16 | 10 | 13 | 10 | 80 | G | 27 | 22 | F | SLP1GF02N1CC9 | 2.2 |
| | 10.5 | 1.68 | 0.1 | 16 | 10 | 16 | 10 | | | 120 | G | 27 | 22 | F | SLP1GF02E1CC9 | 2.2 |
| | 10.5 | 1.68 | 0.1 | 16 | 10 | 16 | 10 | 13 | 10 | 120 | G | 27 | 22 | F | SLP1GF02V1CC9 | 2.2 |
| 1/2 " | 10.5 | 1.75 | 0.1 | 16 | 10 | 16 | 10 | 13 | 10 | 80 | G | 27 | 22 | F | SLP1GF02N1DC9 | 2.1 |
| | 10.5 | 1.75 | 0.1 | 16 | 10 | 16 | 10 | | | 120 | G | 27 | 22 | F | SLP1GF02N1DC9 | 2.1 |
| | 10.5 | 1.75 | 0.1 | 16 | 10 | 16 | 10 | 13 | 10 | 120 | G | 27 | 22 | F | SLP1GF02N1DC9 | 2.1 |

# SLP Small Series 2/2-Way Pilot Operated (Stainless steel) Flamepoof Solenoid Valve <Normally Closed>

## Product Feature

2/2 way normally closed solenoid valve, closed when de-energized open , open when energized

Products for series production, small volume, large flow, wide range of application

Body material：SS316 Orifice：φ9 mm

Ambient temp：-20℃~+55℃ Medium temperature：0℃~+120℃

Atmospheric pressure：80~110kpa Relative humidity：≤95%(+25℃)

Voltage：AC220V 、DC24V(Other voltage can ask the company)

Seals：NBR、EPDM、VITON

Flame-proof grade：Ex d IIB T4 Gb

Explosion-proof standard：GB3836.1、GB3836.2。

It is suitable for other explosive gas environment except coal mine gas and the place containing Ⅱ A, Ⅱ B T1~T4 explosive gas environment zone 1 and 2

Flow as the arrow ,mounts in any position ; best position is solenoid vertical and upright direction

Specifications for thread of cable outlet device:M20x1.5
If the cable protective cover needs to be installed, the certified explosion-proof connector must be used



## External Dimensions

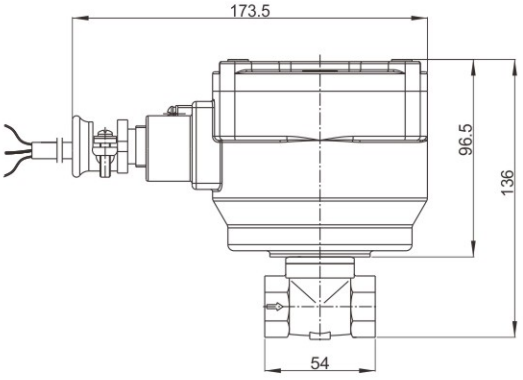


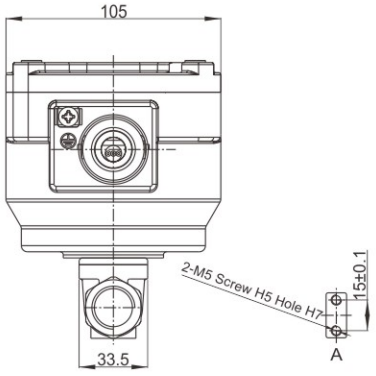


## Valve Selection List

| Pipe Size | Orifice mm | CV Factor | Operating pressure differential(kgf/cm²) Min. | Max. Air Gas AC | Max. Air Gas DC | Max. Water Hot water Liquid AC | Max. Water Hot water Liquid DC | Max. Light oil AC | Max. Light oil DC | Max. fluids Temp. ℃ | Coil Type | Power consumption VA AC 220V | Power consumption W DC 24V | Coil Grade | Model Code 220VAC | Weight KG |
|---|---|---|---|---|---|---|---|---|---|---|---|---|---|---|---|---|
| 1/4 " | 9 | 1.2 | 0.1 | 16 | 10 | 16 | 10 | 13 | 10 | 80 | G | 27 | 22 | F | SLP1GF02N3BC9 | 2.2 |
| | 9 | 1.2 | 0.1 | 16 | 10 | 16 | 10 | | | 120 | G | 27 | 22 | F | SLP1GF02E3BC9 | 2.2 |
| | 9 | 1.2 | 0.1 | 16 | 10 | 16 | 10 | 13 | 10 | 120 | G | 27 | 22 | F | SLP1GF02V3BC9 | 2.2 |
| 3/8 " | 9 | 1.2 | 0.1 | 16 | 10 | 16 | 10 | 13 | 10 | 80 | G | 27 | 22 | F | SLP1GF02N3CC9 | 2.2 |
| | 9 | 1.2 | 0.1 | 16 | 10 | 16 | 10 | | | 120 | G | 27 | 22 | F | SLP1GF02E3CC9 | 2.2 |
| | 9 | 1.2 | 0.1 | 16 | 10 | 16 | 10 | 13 | 10 | 120 | G | 27 | 22 | F | SLP1GF02V3CC9 | 2.2 |
| 1/2 " | 9 | 1.2 | 0.1 | 16 | 10 | 16 | 10 | 13 | 10 | 80 | G | 27 | 22 | F | SLP1GF02N3DC9 | 2.1 |
| | 9 | 1.2 | 0.1 | 16 | 10 | 16 | 10 | | | 120 | G | 27 | 22 | F | SLP1GF02N3DC9 | 2.1 |
| | 9 | 1.2 | 0.1 | 16 | 10 | 16 | 10 | 13 | 10 | 120 | G | 27 | 22 | F | SLP1GF02N3DC9 | 2.1 |

# SLP Small Series 2/2-Way Direct Acting (Brass) Flameproof Solenoid Valve <Normally Closed>

## Product Feature

2/2 way normally closed solenoid valve, closed when de-energized open , open when energized

Products for series production, small volume, large flow, wide range of application

Body material：Forged Brass Orifice：ϕ10.5mm

Ambient temp：-20℃~+55℃ Medium temperature：0℃~+120℃

Atmospheric pressure：80~110kpa Relative humidity：≤95%(+25℃)

Voltage：AC220V 、DC24V(Other voltage can ask the company)

Seals：NBR、EPDM、VITON

Flame-proof grade：Ex d IIB T4 Gb

Explosion-proof standard：GB3836.1、GB3836.2。

It is suitable for other explosive gas environment except coal mine gas and the place containing Ⅱ A, Ⅱ B T1~T4 explosive gas environment zone 1 and 2

Flow as the arrow ,mounts in any position ; best position is solenoid vertical and upright direction

Specifications for thread of cable outlet device:M20x1.5
If the cable protective cover needs to be installed, the certified explosion-proof connector must be used



## External Dimensions

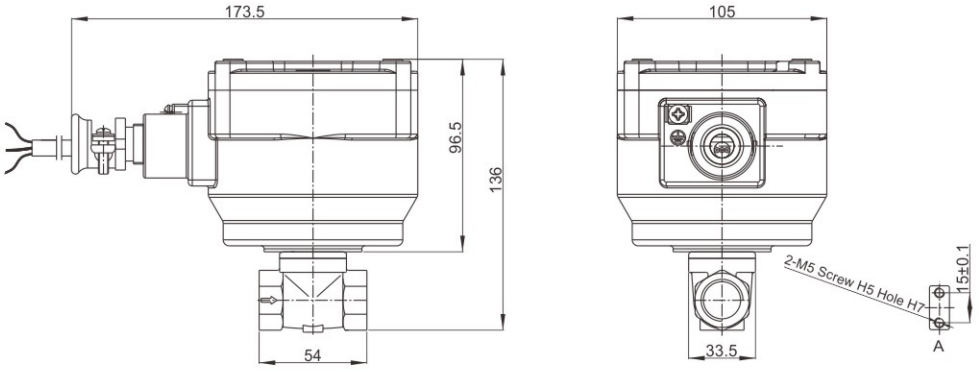


## Valve Selection List

| Pipe Size | Orifice mm | CV Factor | Operating pressure differential(kgf/cm²) Min. | Max. Air Gas AC | Max. Air Gas DC | Max. Water Hot water Liquid AC | Max. Water Hot water Liquid DC | Max. Light oil AC | Max. Light oil DC | Max. fluids Temp. ℃ | Coil Type | Power consumption VA AC 220V | Power consumption W DC 24V | Coil Grade | Model Code 220VAC | Weight KG |
|---|---|---|---|---|---|---|---|---|---|---|---|---|---|---|---|---|
| 1/4 " | 10.5 | 1.47 | 0 | 16 | 10 | 16 | 10 | 13 | 10 | 80 | G | 27 | 22 | F | SLP1GF02N1B10 | 2.2 |
| | 10.5 | 1.47 | 0 | 16 | 10 | 16 | 10 | | | 120 | G | 27 | 22 | F | SLP1GF02E1B10 | 2.2 |
| | 10.5 | 1.47 | 0 | 16 | 10 | 16 | 10 | 13 | 10 | 120 | G | 27 | 22 | F | SLP1GF02V1B10 | 2.2 |
| 3/8 " | 10.5 | 1.68 | 0 | 16 | 10 | 16 | 10 | 13 | 10 | 80 | G | 27 | 22 | F | SLP1GF02N1C10 | 2.2 |
| | 10.5 | 1.68 | 0 | 16 | 10 | 16 | 10 | | | 120 | G | 27 | 22 | F | SLP1GF02E1C10 | 2.2 |
| | 10.5 | 1.68 | 0 | 16 | 10 | 16 | 10 | 13 | 10 | 120 | G | 27 | 22 | F | SLP1GF02V1C10 | 2.2 |
| 1/2 " | 10.5 | 1.75 | 0 | 16 | 10 | 16 | 10 | 13 | 10 | 80 | G | 27 | 22 | F | SLP1GF02N1D10 | 2.1 |
| | 10.5 | 1.75 | 0 | 16 | 10 | 16 | 10 | | | 120 | G | 27 | 22 | F | SLP1GF02E1D10 | 2.1 |
| | 10.5 | 1.75 | 0 | 16 | 10 | 16 | 10 | 13 | 10 | 120 | G | 27 | 22 | F | SLP1GF02V1D10 | 2.1 |

# SLP Small Series 2/2-Way Direct Acting (Stainless steel) Flameproof Solenoid Valve <Normally Closed>

## Product Feature

2/2 way normally closed solenoid valve, closed when de-energized open , open when energized

Products for series production, small volume, large flow, wide range of application

Body material：SS316 Orifice：ϕ9 mm

Ambient temp：-20℃~+55℃ Medium temperature：0℃~+120℃

Atmospheric pressure：80~110kpa Relative humidity：≤95%(+25℃)

Voltage：AC220V 、DC24V(Other voltage can ask the company)

Seals：NBR、EPDM、VITON

Flame-proof grade：Ex d IIB T4 Gb

Explosion-proof standard：GB3836.1、GB3836.2。

It is suitable for other explosive gas environment except coal mine gas and the place containing Ⅱ A, Ⅱ B T1~T4 explosive gas environment zone 1 and 2

Flow as the arrow ,mounts in any position ; best position is solenoid vertical and upright direction

Specifications for thread of cable outlet device:M20x1.5
If the cable protective cover needs to be installed, the certified explosion-proof connector must be used



## External Dimensions

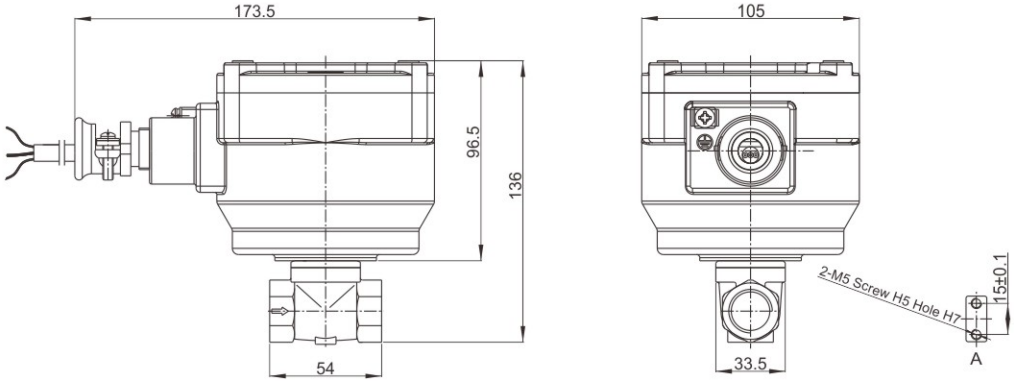


## Valve Selection List

| Pipe Size | Orifice mm | CV Factor | Operating pressure differential(kgf/cm²) Min. | Max. Air Gas AC | Max. Air Gas DC | Max. Water Hot water Liquid AC | Max. Water Hot water Liquid DC | Max. Light oil AC | Max. Light oil DC | Max. fluids Temp. ℃ | Coil Type | Power consumption VA AC 220V | Power consumption W DC 24V | Coil Grade | Model Code 220VAC | Weight KG |
|---|---|---|---|---|---|---|---|---|---|---|---|---|---|---|---|---|
| 1/4 " | 9 | 1.2 | 0 | 16 | 10 | 16 | 10 | 13 | 10 | 80 | G | 27 | 22 | F | SLP1GF02N3B10 | 2.2 |
| | 9 | 1.2 | 0 | 16 | 10 | 16 | 10 | | | 120 | G | 27 | 22 | F | SLP1GF02E3B10 | 2.2 |
| | 9 | 1.2 | 0 | 16 | 10 | 16 | 10 | 13 | 10 | 120 | G | 27 | 22 | F | SLP1GF02V3B10 | 2.2 |
| 3/8 " | 9 | 1.2 | 0 | 16 | 10 | 16 | 10 | 13 | 10 | 80 | G | 27 | 22 | F | SLP1GF02N3C10 | 2.2 |
| | 9 | 1.2 | 0 | 16 | 10 | 16 | 10 | | | 120 | G | 27 | 22 | F | SLP1GF02E3C10 | 2.2 |
| | 9 | 1.2 | 0 | 16 | 10 | 16 | 10 | 13 | 10 | 120 | G | 27 | 22 | F | SLP1GF02V3C10 | 2.2 |
| 1/2 " | 9 | 1.2 | 0 | 16 | 10 | 16 | 10 | 13 | 10 | 80 | G | 27 | 22 | F | SLP1GF02N3D10 | 2.1 |
| | 9 | 1.2 | 0 | 16 | 10 | 16 | 10 | | | 120 | G | 27 | 22 | F | SLP1GF02E3D10 | 2.1 |
| | 9 | 1.2 | 0 | 16 | 10 | 16 | 10 | 13 | 10 | 120 | G | 27 | 22 | F | SLP1GF02V3D10 | 2.1 |

# SLP Series 2/2-Way Large Diameter Pilot Operated (Brass) Flameproof Solenoid Valve <Normally Closed>

## Product Feature

2/2 way normally closed solenoid valve, closed when de-energized open , open when energized

Working pressure：0.5~16kgf/cm$^2$

Body material：Forged Brass

Ambient temp：-20℃~+55℃ Medium temperature：0℃~+120℃

Atmospheric pressure：80~110kpa Relative humidity：≤95%(+25℃)

Voltage：AC220V 、DC24V(Other voltage can ask the company)

Seals：NBR、EPDM、VITON

Flame-proof grade：Ex d IIB T4 Gb

Explosion-proof standard：GB3836.1、GB3836.2。

It is suitable for other explosive gas environment except coal mine gas and the place containing Ⅱ A, Ⅱ B T1~T4 explosive gas environment zone 1 and 2

Flow as the arrow ,mounts in any position ; best position is solenoid vertical and upright direction

Specifications for thread of cable outlet device:M20x1.5
If the cable protective cover needs to be installed, the certified explosion-proof connector must be used

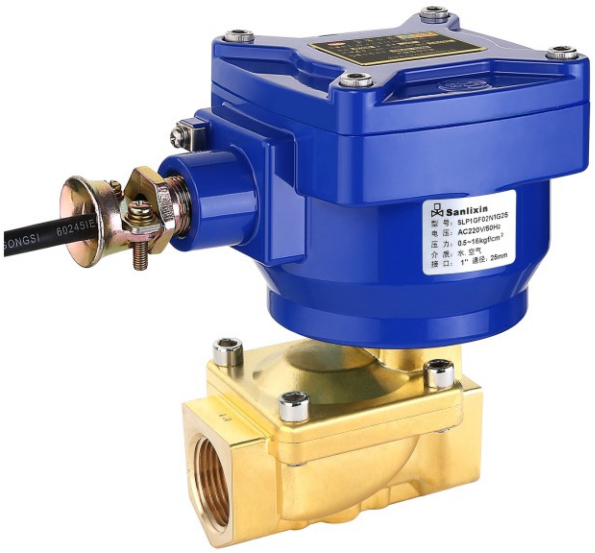


**Normally closed**




## External Dimensions

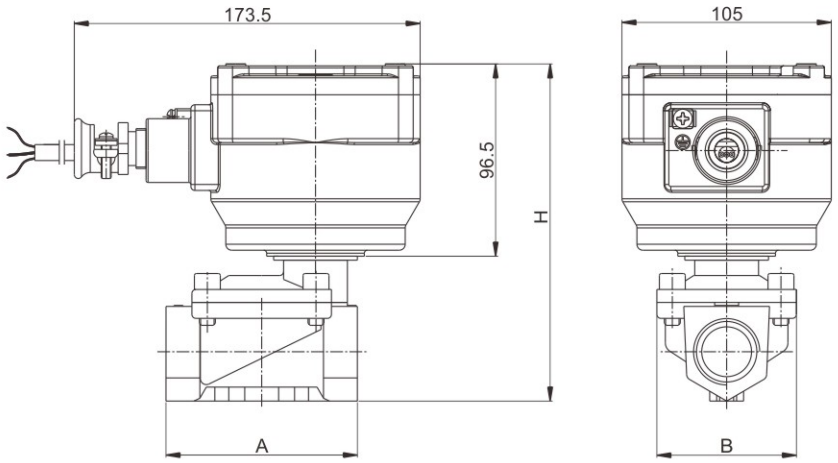

# SLP Series 2/2-Way Large Diameter Pilot Operated (Brass) Flameproof Solenoid Valve <Normally Closed>

## Valve Selection List

| Pipe Size | Orifice mm | CV Factor | Operating pressure differential(kgf/cm²) | | | | Max. fluids Temp. ℃ | Coil Type | Power consumption | | Coil Grade | External Dimensions Length x Width x Height L x B x H | Model Code 220VAC | Weight KG |
|---|---|---|---|---|---|---|---|---|---|---|---|---|---|---|
| | | | Min. | Max. | | | | | VA | W | | | | |
| | | | | Air Gas | Water Hot water Liquid | Light oil | | | AC 220V | DC 24V | | | | |
| 3/8 " | 13 | 4.5 | 0.5 | 16 | 16 | 13 | 80 | G | 27 | 22 | F | 66 × 48 × 152 | SLP1GF02N1C13 | 2.5 |
| | 13 | 4.5 | 0.5 | 16 | 16 | | 120 | G | 27 | 22 | F | 66 × 48 × 152 | SLP1GF02E1C13 | 2.5 |
| | 13 | 4.5 | 0.5 | 16 | 16 | 13 | 120 | G | 27 | 22 | F | 66 × 48 × 152 | SLP1GF02V1C13 | 2.5 |
| 1/2 " | 13 | 4.5 | 0.5 | 16 | 16 | 13 | 80 | G | 27 | 22 | F | 66 × 48 × 152 | SLP1GF02N1D13 | 2.4 |
| | 13 | 4.5 | 0.5 | 16 | 16 | | 120 | G | 27 | 22 | F | 66 × 48 × 152 | SLP1GF02E1D13 | 2.4 |
| | 13 | 4.5 | 0.5 | 16 | 16 | 13 | 120 | G | 27 | 22 | F | 66 × 48 × 152 | SLP1GF02V1D13 | 2.4 |
| 3/4 " | 20 | 7.6 | 0.5 | 16 | 16 | 13 | 80 | G | 27 | 22 | F | 75 × 58 × 157 | SLP1GF02N1E20 | 2.6 |
| | 20 | 7.6 | 0.5 | 16 | 16 | | 120 | G | 27 | 22 | F | 75 × 58 × 157 | SLP1GF02E1E20 | 2.6 |
| | 20 | 7.6 | 0.5 | 16 | 16 | 13 | 120 | G | 27 | 22 | F | 75 × 58 × 157 | SLP1GF02V1E20 | 2.6 |
| 1 " | 20 | 7.6 | 0.5 | 16 | 16 | 13 | 80 | G | 27 | 22 | F | 81 × 58 × 163 | SLP1GF02N1G20 | 2.8 |
| | 20 | 7.6 | 0.5 | 16 | 16 | | 120 | G | 27 | 22 | F | 81 × 58 × 163 | SLP1GF02E1G20 | 2.8 |
| | 20 | 7.6 | 0.5 | 16 | 16 | 13 | 120 | G | 27 | 22 | F | 81 × 58 × 163 | SLP1GF02V1G20 | 2.8 |
| | 25 | 12 | 0.5 | 16 | 16 | 13 | 80 | G | 27 | 22 | F | 96 × 70 × 170 | SLP1GF02N1G25 | 3.1 |
| | 25 | 12 | 0.5 | 16 | 16 | | 120 | G | 27 | 22 | F | 96 × 70 × 170 | SLP1GF02E1G25 | 3.1 |
| | 25 | 12 | 0.5 | 16 | 16 | 13 | 120 | G | 27 | 22 | F | 96 × 70 × 170 | SLP1GF02V1G25 | 3.1 |
| 1 1/4 " | 35 | 22 | 0.5 | 16 | 16 | 13 | 80 | G | 27 | 22 | F | 131 × 96 × 189 | SLP1GF02N1H35 | 4.5 |
| | 35 | 22 | 0.5 | 16 | 16 | | 120 | G | 27 | 22 | F | 131 × 96 × 189 | SLP1GF02E1H35 | 4.5 |
| | 35 | 22 | 0.5 | 16 | 16 | 13 | 120 | G | 27 | 22 | F | 131 × 96 × 189 | SLP1GF02V1H35 | 4.5 |
| 1 1/2 " | 40 | 30 | 0.5 | 16 | 16 | 13 | 80 | G | 27 | 22 | F | 131 × 96 × 189 | SLP1GF02N1J40 | 4.4 |
| | 40 | 30 | 0.5 | 16 | 16 | | 120 | G | 27 | 22 | F | 131 × 96 × 189 | SLP1GF02E1J40 | 4.4 |
| | 40 | 30 | 0.5 | 16 | 16 | 13 | 120 | G | 27 | 22 | F | 131 × 96 × 189 | SLP1GF02V1J40 | 4.4 |
| 2 " | 40 | 30 | 0.5 | 16 | 16 | 13 | 80 | G | 27 | 22 | F | 136 × 96 × 202 | SLP1GF02N1K40 | 4.8 |
| | 40 | 30 | 0.5 | 16 | 16 | | 120 | G | 27 | 22 | F | 136 × 96 × 202 | SLP1GF02E1K40 | 4.8 |
| | 40 | 30 | 0.5 | 16 | 16 | 13 | 120 | G | 27 | 22 | F | 136 × 96 × 202 | SLP1GF02V1K40 | 4.8 |
| | 50 | 48 | 0.5 | 16 | 16 | 13 | 80 | G | 27 | 22 | F | 165 × 120 × 210 | SLP1GF02N1K50 | 5.7 |
| | 50 | 48 | 0.5 | 16 | 16 | | 120 | G | 27 | 22 | F | 165 × 120 × 210 | SLP1GF02E1K50 | 5.7 |
| | 50 | 48 | 0.5 | 16 | 16 | 13 | 120 | G | 27 | 22 | F | 165 × 120 × 210 | SLP1GF02V1K50 | 5.7 |

# SLP Series 2/2-Way Large Diameter Pilot Operated (Stainless steel) Flameproof Solenoid Valve <Normally Closed>

## Product Feature

2/2 way normally closed solenoid valve, closed when de-energized open , open when energized

Working pressure：0.5~16kgf/cm$^2$

Body material：SS316(The size above DN65 is SS304)

Ambient temp：-20℃~+55℃ Medium temperature：0℃~+120℃

Atmospheric pressure：80~110kpa Relative humidity：≤95%(+25℃)

Voltage：AC220V 、DC24V(Other voltage can ask the company)

Seals：NBR、EPDM、VITON

Flame-proof grade：Ex d IIB T4 Gb

Explosion-proof standard：GB3836.1、GB3836.2。

It is suitable for other explosive gas environment except coal mine gas and the place containing Ⅱ A, Ⅱ B T1~T4 explosive gas environment zone 1 and 2

Flow as the arrow ,mounts in any position ; best position is solenoid vertical and upright direction

Specifications for thread of cable outlet device:M20x1.5

If the cable protective cover needs to be installed, the certified explosion-proof connector must be used



**Normally closed**




## External Dimensions

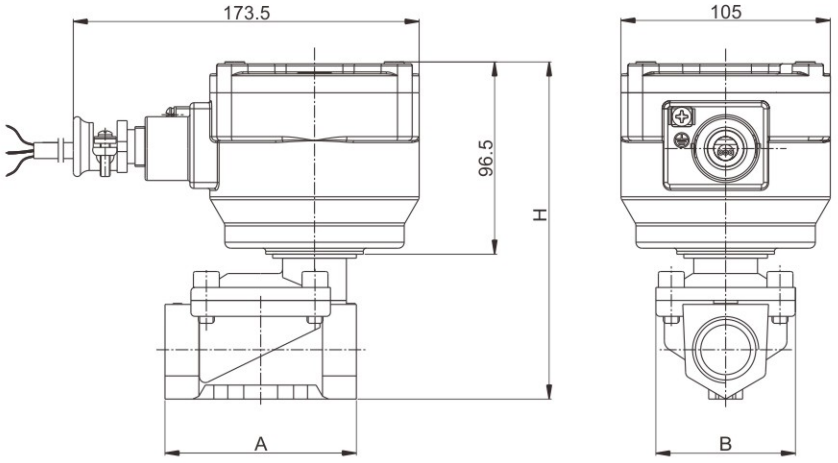

# SLP Series 2/2-Way Large Diameter Pilot Operated (Stainless steel) Flameproof Solenoid Valve <Normally Closed>

## Valve Selection List

| Pipe Size | Orifice mm | CV Factor | Operating pressure differential(kgf/cm²) | | | | Max. fluids Temp. ℃ | Coil Type | Power consumption | | Coil Grade | External Dimensions Length x Width x Height L x B x H | Model Code 220VAC | Weight KG |
|---|---|---|---|---|---|---|---|---|---|---|---|---|---|---|
| | | | Min. | Max. | | | | | VA | W | | | | |
| | | | | Air Gas | Water Hot water Liquid | Light oil | | | AC 220V | DC 24V | | | | |
| 3/8 " | 13 | 4.5 | 0.5 | 16 | 16 | 13 | 80 | G | 27 | 22 | F | 66 × 48 × 152 | SLP1GF02N3C13 | 2.5 |
| | 13 | 4.5 | 0.5 | 16 | 16 | | 120 | G | 27 | 22 | F | 66 × 48 × 152 | SLP1GF02E3C13 | 2.5 |
| | 13 | 4.5 | 0.5 | 16 | 16 | 13 | 120 | G | 27 | 22 | F | 66 × 48 × 152 | SLP1GF02V3C13 | 2.5 |
| 1/2 " | 13 | 4.5 | 0.5 | 16 | 16 | 13 | 80 | G | 27 | 22 | F | 66 × 48 × 152 | SLP1GF02N3D13 | 2.4 |
| | 13 | 4.5 | 0.5 | 16 | 16 | | 120 | G | 27 | 22 | F | 66 × 48 × 152 | SLP1GF02E3D13 | 2.4 |
| | 13 | 4.5 | 0.5 | 16 | 16 | 13 | 120 | G | 27 | 22 | F | 66 × 48 × 152 | SLP1GF02V3D13 | 2.4 |
| 3/4 " | 20 | 7.6 | 0.5 | 16 | 16 | 13 | 80 | G | 27 | 22 | F | 75 × 58 × 157 | SLP1GF02N3E20 | 2.6 |
| | 20 | 7.6 | 0.5 | 16 | 16 | | 120 | G | 27 | 22 | F | 75 × 58 × 157 | SLP1GF02E3E20 | 2.6 |
| | 20 | 7.6 | 0.5 | 16 | 16 | 13 | 120 | G | 27 | 22 | F | 75 × 58 × 157 | SLP1GF02V3E20 | 2.6 |
| 1 " | 20 | 7.6 | 0.5 | 16 | 16 | 13 | 80 | G | 27 | 22 | F | 81 × 58 × 163 | SLP1GF02N3G20 | 2.7 |
| | 20 | 7.6 | 0.5 | 16 | 16 | | 120 | G | 27 | 22 | F | 81 × 58 × 163 | SLP1GF02E3G20 | 2.7 |
| | 20 | 7.6 | 0.5 | 16 | 16 | 13 | 120 | G | 27 | 22 | F | 81 × 58 × 163 | SLP1GF02V3G20 | 2.7 |
| | 25 | 12 | 0.5 | 16 | 16 | 13 | 80 | G | 27 | 22 | F | 96 × 70 × 170 | SLP1GF02N3G25 | 3.0 |
| | 25 | 12 | 0.5 | 16 | 16 | | 120 | G | 27 | 22 | F | 96 × 70 × 170 | SLP1GF02E3G25 | 3.0 |
| | 25 | 12 | 0.5 | 16 | 16 | 13 | 120 | G | 27 | 22 | F | 96 × 70 × 170 | SLP1GF02V3G25 | 3.0 |
| 1 1/4 " | 35 | 22 | 0.5 | 16 | 16 | 13 | 80 | G | 27 | 22 | F | 131 × 96 × 189 | SLP1GF02N3H35 | 4.3 |
| | 35 | 22 | 0.5 | 16 | 16 | | 120 | G | 27 | 22 | F | 131 × 96 × 189 | SLP1GF02E3H35 | 4.3 |
| | 35 | 22 | 0.5 | 16 | 16 | 13 | 120 | G | 27 | 22 | F | 131 × 96 × 189 | SLP1GF02V3H35 | 4.3 |
| 1 1/2 " | 40 | 30 | 0.5 | 16 | 16 | 13 | 80 | G | 27 | 22 | F | 131 × 96 × 189 | SLP1GF02N3J40 | 4.2 |
| | 40 | 30 | 0.5 | 16 | 16 | | 120 | G | 27 | 22 | F | 131 × 96 × 189 | SLP1GF02E3J40 | 4.2 |
| | 40 | 30 | 0.5 | 16 | 16 | 13 | 120 | G | 27 | 22 | F | 131 × 96 × 189 | SLP1GF02V3J40 | 4.2 |
| 2 " | 40 | 30 | 0.5 | 16 | 16 | 13 | 80 | G | 27 | 22 | F | 136 × 96 × 202 | SLP1GF02N3K40 | 4.4 |
| | 40 | 30 | 0.5 | 16 | 16 | | 120 | G | 27 | 22 | F | 136 × 96 × 202 | SLP1GF02E3K40 | 4.4 |
| | 40 | 30 | 0.5 | 16 | 16 | 13 | 120 | G | 27 | 22 | F | 136 × 96 × 202 | SLP1GF02V3K40 | 4.4 |
| | 50 | 48 | 0.5 | 16 | 16 | 13 | 80 | G | 27 | 22 | F | 165 × 120 × 210 | SLP1GF02N3K50 | 6.1 |
| | 50 | 48 | 0.5 | 16 | 16 | | 120 | G | 27 | 22 | F | 165 × 120 × 210 | SLP1GF02E3K50 | 6.1 |
| | 50 | 48 | 0.5 | 16 | 16 | 13 | 120 | G | 27 | 22 | F | 165 × 120 × 210 | SLP1GF02V3K50 | 6.1 |

# SLP Series 2/2-Way Stainless Steel Flange Flameproof Solenoid Valve <Normally Closed>



## External Dimensions

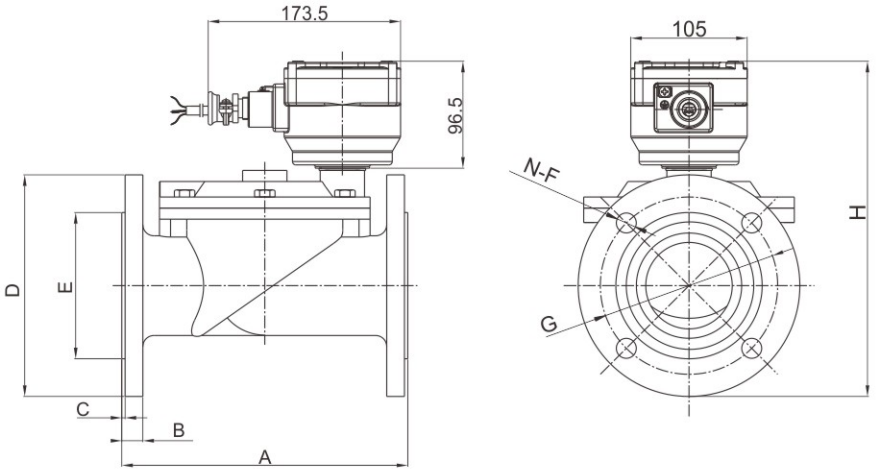


| | A | B | C | ΦD | ΦE | N-ΦF | ΦG | H |
|---|---|---|---|---|---|---|---|---|
| DN25 | 134 | 13 | 2 | 110 | 58 | 4-14 | 85 | 214 |
| DN32 | 160 | 15 | 2 | 135 | 74 | 4-18 | 100 | 237 |
| DN40 | 160 | 15 | 2 | 145 | 84 | 4-18 | 110 | 242 |
| DN50 | 200 | 16 | 2 | 160 | 88 | 4-18 | 125 | 259 |
| DN65 | 250 | 19 | 3 | 185 | 118 | 4-18 | 145 | 290 |
| DN80 | 270 | 19 | 3 | 200 | 134 | 4-18 | 160 | 305 |
| DN100 | 340 | 21 | 3 | 220 | 162 | 8-18 | 180 | 334 |

# SLP Series 2/2-Way Stainless Steel Flange Flameproof Solenoid Valve <Normally Closed>

## Valve Selection List

| Orifice mm | CV Factor | Operating pressure differential(kgf/cm²) | | | | | | | Max. fluids Temp. ℃ | Coil Type | Power consumption | | Coil Grade | Model Code 220VAC | Weight KG |
|---|---|---|---|---|---|---|---|---|---|---|---|---|---|---|---|
| | | Min. | Max. | | | | | | | | VA | W | | | |
| | | | Air Gas | | Water Hot water Liquid | | Light oil | | | | AC 220V | DC 24 | | | |
| | | | AC | DC | AC | DC | AC | DC | | | | | | | |
| 25 | 12 | 0.5 | 16 | 16 | 16 | 16 | 13 | 13 | 80 | G | 27 | 22 | F | SLP1GF02N3F25 | 4.4 |
| 25 | 12 | 0.5 | 16 | 16 | 16 | 16 | | | 120 | G | 27 | 22 | F | SLP1GF02E3F25 | 4.4 |
| 25 | 12 | 0.5 | 16 | 16 | 16 | 16 | 13 | 13 | 120 | G | 27 | 22 | F | SLP1GF02V3F25 | 4.4 |
| 35 | 22 | 0.5 | 16 | 16 | 16 | 16 | 13 | 13 | 80 | G | 27 | 22 | F | SLP1GF02N3F35 | 6.7 |
| 35 | 22 | 0.5 | 16 | 16 | 16 | 16 | | | 120 | G | 27 | 22 | F | SLP1GF02E3F35 | 6.7 |
| 35 | 22 | 0.5 | 16 | 16 | 16 | 16 | 13 | 13 | 120 | G | 27 | 22 | F | SLP1GF02V3F35 | 6.7 |
| 40 | 30 | 0.5 | 16 | 16 | 16 | 16 | 13 | 13 | 80 | G | 27 | 22 | F | SLP1GF02N3F40 | 7 |
| 40 | 30 | 0.5 | 16 | 16 | 16 | 16 | | | 120 | G | 27 | 22 | F | SLP1GF02E3F40 | 7 |
| 40 | 30 | 0.5 | 16 | 16 | 16 | 16 | 13 | 13 | 120 | G | 27 | 22 | F | SLP1GF02V3F40 | 7 |
| 50 | 48 | 0.5 | 16 | 16 | 16 | 16 | 13 | 13 | 80 | G | 27 | 22 | F | SLP1GF02N3F50 | 9.6 |
| 50 | 48 | 0.5 | 16 | 16 | 16 | 16 | | | 120 | G | 27 | 22 | F | SLP1GF02E3F50 | 9.6 |
| 50 | 48 | 0.5 | 16 | 16 | 16 | 16 | 13 | 13 | 120 | G | 27 | 22 | F | SLP1GF02V3F50 | 9.6 |
| 65 | 52 | 1 | 10 | 10 | 10 | 10 | 8 | 6 | 80 | G | 27 | 22 | F | SLP1GF02N4F65 | 15.1 |
| 65 | 52 | 1 | 10 | 10 | 10 | 10 | | | 120 | G | 27 | 22 | F | SLP1GF02E4F65 | 15.1 |
| 65 | 52 | 1 | 10 | 10 | 10 | 10 | 8 | 6 | 120 | G | 27 | 22 | F | SLP1GF02V4F65 | 15.1 |
| 80 | 80 | 1 | 10 | 10 | 10 | 10 | 8 | 6 | 80 | G | 27 | 22 | F | SLP1GF02N4F80 | 17.2 |
| 80 | 80 | 1 | 10 | 10 | 10 | 10 | | | 120 | G | 27 | 22 | F | SLP1GF02E4F80 | 17.2 |
| 80 | 80 | 1 | 10 | 10 | 10 | 10 | 8 | 6 | 120 | G | 27 | 22 | F | SLP1GF02V4F80 | 17.2 |
| 100 | 128 | 1 | 10 | 10 | 10 | 10 | 8 | 6 | 80 | G | 27 | 22 | F | SLP1GF02N4F100 | 23.6 |
| 100 | 128 | 1 | 10 | 10 | 10 | 10 | | | 120 | G | 27 | 22 | F | SLP1GF02E4F100 | 23.6 |
| 100 | 128 | 1 | 10 | 10 | 10 | 10 | 8 | 6 | 120 | G | 27 | 22 | F | SLP1GF02V4F100 | 23.6 |

# SLP Series 2/2-Way Large Diameter Pilot Operated (Brass) Flameproof Solenoid Valve <Normally Open>

## Product Feature

2/2 way normally open solenoid valve, open when de-energized open , closed when energized

Working pressure：0.5~13kgf/cm$^2$

Body material：Forged Brass

Ambient temp：-20℃~+55℃ Medium temperature：0℃~+120℃

Atmospheric pressure：80~110kpa Relative humidity：≤95%(+25℃)

Voltage：AC220V 、DC24V(Other voltage can ask the company)

Seals：NBR、EPDM、VITON

Flame-proof grade：Ex d IIB T4 Gb

Explosion-proof standard：GB3836.1、GB3836.2。

It is suitable for other explosive gas environment except coal mine gas and the place containing Ⅱ A, Ⅱ B T1~T4 explosive gas environment zone 1 and 2

Flow as the arrow ,mounts in any position ; best position is solenoid vertical and upright direction

Specifications for thread of cable outlet device:M20x1.5

If the cable protective cover needs to be installed, the certified explosion-proof connector must be used

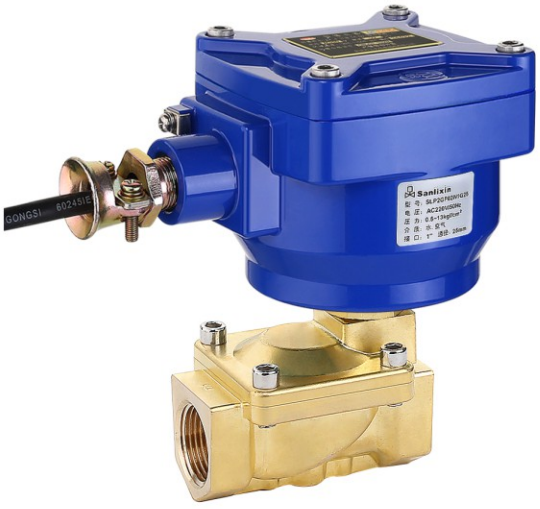

**Normally open**

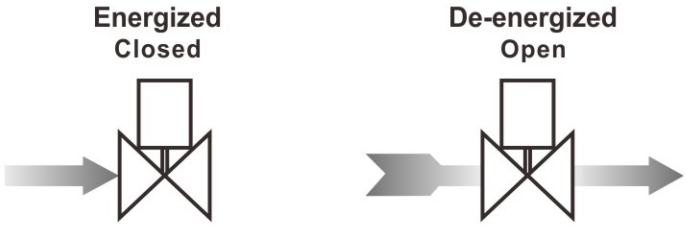


## External Dimensions

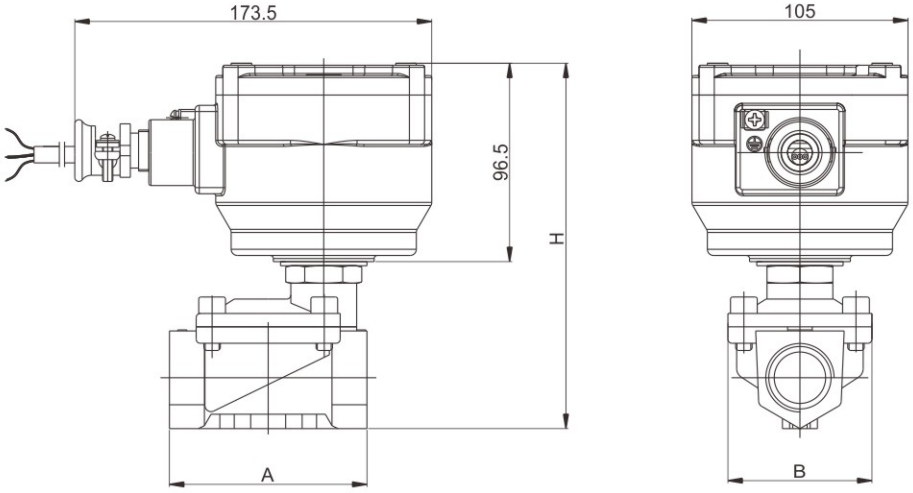

# SLP Series 2/2-Way Large Diameter Pilot Operated (Brass) Flameproof Solenoid Valve <Normally Open>

## Valve Selection List

| Pipe Size | Orifice mm | CV Factor | Operating pressure differential(kgf/cm²) | | | | Max. fluids Temp. ℃ | Coil Type | Power consumption | | Coil Grade | External Dimensions Length x Width x Height L x B x H | Model Code 220VAC | Weight KG |
|---|---|---|---|---|---|---|---|---|---|---|---|---|---|---|
| | | | Min. | Max. | | | | | VA | W | | | | |
| | | | | Air Gas | Water Hot water Liquid | Light oil | | | AC 220V | DC 24V | | | | |
| 3/8 " | 13 | 4.5 | 0.5 | 13 | 13 | 8 | 80 | G | 27 | 22 | F | 66 × 48 × 160 | SLP2GF02N1C13 | 2.7 |
| | 13 | 4.5 | 0.5 | 13 | 13 | | 120 | G | 27 | 22 | F | 66 × 48 × 160 | SLP2GF02E1C13 | 2.7 |
| | 13 | 4.5 | 0.5 | 13 | 13 | 8 | 120 | G | 27 | 22 | F | 66 × 48 × 160 | SLP2GF02V1C13 | 2.7 |
| 1/2 " | 13 | 4.5 | 0.5 | 13 | 13 | 8 | 80 | G | 27 | 22 | F | 66 × 48 × 160 | SLP2GF02N1D13 | 2.6 |
| | 13 | 4.5 | 0.5 | 13 | 13 | | 120 | G | 27 | 22 | F | 66 × 48 × 160 | SLP2GF02E1D13 | 2.6 |
| | 13 | 4.5 | 0.5 | 13 | 13 | 8 | 120 | G | 27 | 22 | F | 66 × 48 × 160 | SLP2GF02V1D13 | 2.6 |
| 3/4 " | 20 | 7.6 | 0.5 | 13 | 13 | 8 | 80 | G | 27 | 22 | F | 75 × 58 × 165 | SLP2GF02N1E20 | 2.8 |
| | 20 | 7.6 | 0.5 | 13 | 13 | | 120 | G | 27 | 22 | F | 75 × 58 × 165 | SLP2GF02E1E20 | 2.8 |
| | 20 | 7.6 | 0.5 | 13 | 13 | 8 | 120 | G | 27 | 22 | F | 75 × 58 × 165 | SLP2GF02V1E20 | 2.8 |
| 1 " | 20 | 7.6 | 0.5 | 13 | 13 | 8 | 80 | G | 27 | 22 | F | 81 × 58 × 171 | SLP2GF02N1G20 | 3.0 |
| | 20 | 7.6 | 0.5 | 13 | 13 | | 120 | G | 27 | 22 | F | 81 × 58 × 171 | SLP2GF02E1G20 | 3.0 |
| | 20 | 7.6 | 0.5 | 13 | 13 | 8 | 120 | G | 27 | 22 | F | 81 × 58 × 171 | SLP2GF02V1G20 | 3.0 |
| | 25 | 12 | 0.5 | 13 | 13 | 8 | 80 | G | 27 | 22 | F | 96 × 70 × 178 | SLP2GF02N1G25 | 3.3 |
| | 25 | 12 | 0.5 | 13 | 13 | | 120 | G | 27 | 22 | F | 96 × 70 × 178 | SLP2GF02E1G25 | 3.3 |
| | 25 | 12 | 0.5 | 13 | 13 | 8 | 120 | G | 27 | 22 | F | 96 × 70 × 178 | SLP2GF02V1G25 | 3.3 |
| 1 1/4 " | 35 | 22 | 0.5 | 8 | 8 | 8 | 80 | G | 27 | 22 | F | 131 × 96 × 197 | SLP2GF02N1H35 | 4.7 |
| | 35 | 22 | 0.5 | 8 | 8 | | 120 | G | 27 | 22 | F | 131 × 96 × 197 | SLP2GF02E1H35 | 4.7 |
| | 35 | 22 | 0.5 | 8 | 8 | 8 | 120 | G | 27 | 22 | F | 131 × 96 × 197 | SLP2GF02V1H35 | 4.7 |
| 1 1/2 " | 40 | 30 | 0.5 | 8 | 8 | 8 | 80 | G | 27 | 22 | F | 131 × 96 × 197 | SLP2GF02N1J40 | 4.6 |
| | 40 | 30 | 0.5 | 8 | 8 | | 120 | G | 27 | 22 | F | 131 × 96 × 197 | SLP2GF02E1J40 | 4.6 |
| | 40 | 30 | 0.5 | 8 | 8 | 8 | 120 | G | 27 | 22 | F | 131 × 96 × 197 | SLP2GF02V1J40 | 4.6 |
| 2 " | 40 | 30 | 0.5 | 8 | 8 | 8 | 80 | G | 27 | 22 | F | 136 × 96 × 210 | SLP2GF02N1K40 | 5.0 |
| | 40 | 30 | 0.5 | 8 | 8 | | 120 | G | 27 | 22 | F | 136 × 96 × 210 | SLP2GF02E1K40 | 5.0 |
| | 40 | 30 | 0.5 | 8 | 8 | 8 | 120 | G | 27 | 22 | F | 136 × 96 × 210 | SLP2GF02V1K40 | 5.0 |
| | 50 | 48 | 0.5 | 8 | 8 | 8 | 80 | G | 27 | 22 | F | 165 × 120 × 218 | SLP2GF02N1K50 | 5.9 |
| | 50 | 48 | 0.5 | 8 | 8 | | 120 | G | 27 | 22 | F | 165 × 120 × 218 | SLP2GF02E1K50 | 5.9 |
| | 50 | 48 | 0.5 | 8 | 8 | 8 | 120 | G | 27 | 22 | F | 165 × 120 × 218 | SLP2GF02V1K50 | 5.9 |

# SLP Series 2/2-Way Large Diameter Pilot Operated ((Stainless steel) Flameproof Solenoid Valve <Normally Open>

## Product Feature

2/2 way normally open solenoid valve, open when de-energized open , closed when energized

Working pressure：0.5~13kgf/cm²

Body material：SS316(The size above DN65 is SS304)

Ambient temp：-20℃~+55℃ Medium temperature：0℃~+120℃

Atmospheric pressure：80~110kpa Relative humidity：≤95%(+25℃)

Voltage：AC220V 、DC24V(Other voltage can ask the company)

Seals：NBR、EPDM、VITON

Flame-proof grade：Ex d IIB T4 Gb

Explosion-proof standard：GB3836.1、GB3836.2。

It is suitable for other explosive gas environment except coal mine gas and the place containing Ⅱ A, Ⅱ B T1~T4 explosive gas environment zone 1 and 2

Flow as the arrow ,mounts in any position ; best position is solenoid vertical and upright direction

Specifications for thread of cable outlet device:M20x1.5
If the cable protective cover needs to be installed, the certified explosion-proof connector must be used

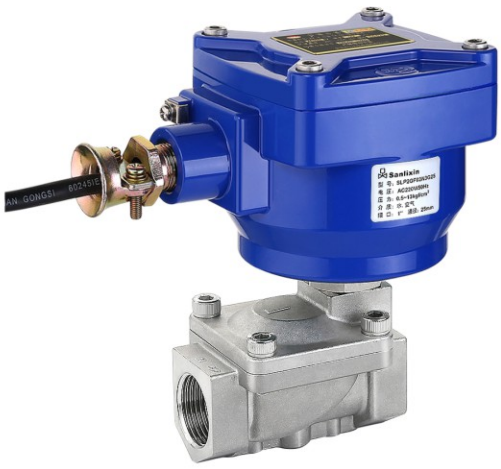

**Normally open**

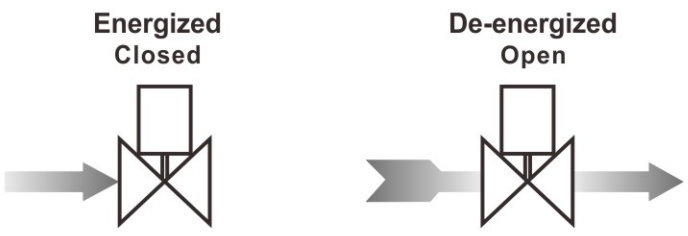


## External Dimensions

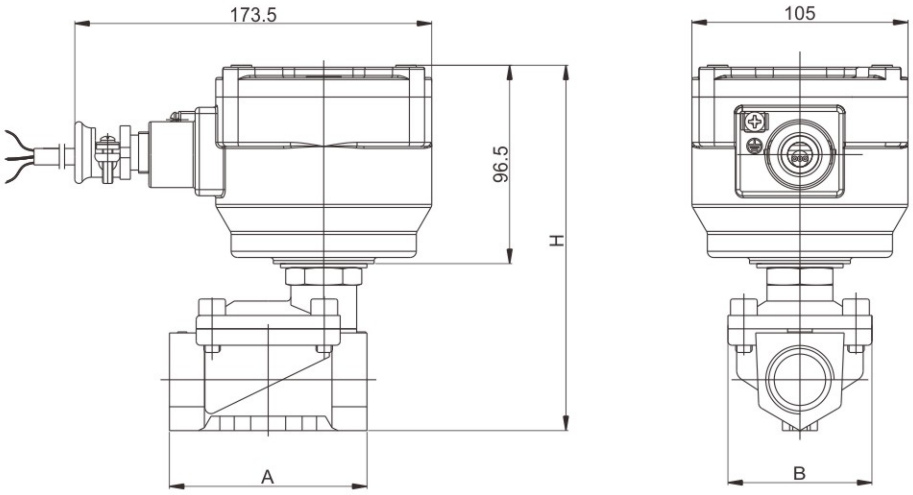

# SLP Series 2/2-Way Large Diameter Pilot Operated (Stainless steel) Flameproof Solenoid Valve <Normally Open>

## Valve Selection List ( Thread )

| Pipe Size | Orifice mm | CV Factor | Operating pressure differential(kgf/cm²) | | | | Max. fluids Temp. ℃ | Coil Type | Power consumption | | Coil Grade | External Dimensions Length x Width x Height L x B x H | Model Code 220VAC | Weight KG |
|---|---|---|---|---|---|---|---|---|---|---|---|---|---|---|
| | | | Min. | Max. | | | | | VA | W | | | | |
| | | | | Air Gas | Water Hot water Liquid | Light oil | | | AC 220V | DC 24V | | | | |
| 3/8 " | 13 | 4.5 | 0.5 | 13 | 13 | 8 | 80 | G | 27 | 22 | F | 66 × 48 × 160 | SLP2GF02N3C13 | 2.8 |
| | 13 | 4.5 | 0.5 | 13 | 13 | | 120 | G | 27 | 22 | F | 66 × 48 × 160 | SLP2GF02E3C13 | 2.8 |
| | 13 | 4.5 | 0.5 | 13 | 13 | 8 | 120 | G | 27 | 22 | F | 66 × 48 × 160 | SLP2GF02V3C13 | 2.8 |
| 1/2 " | 13 | 4.5 | 0.5 | 13 | 13 | 8 | 80 | G | 27 | 22 | F | 66 × 48 × 160 | SLP2GF02N3D13 | 2.7 |
| | 13 | 4.5 | 0.5 | 13 | 13 | | 120 | G | 27 | 22 | F | 66 × 48 × 160 | SLP2GF02E3D13 | 2.7 |
| | 13 | 4.5 | 0.5 | 13 | 13 | 8 | 120 | G | 27 | 22 | F | 66 × 48 × 160 | SLP2GF02V3D13 | 2.7 |
| 3/4 " | 20 | 7.6 | 0.5 | 13 | 13 | 8 | 80 | G | 27 | 22 | F | 75 × 58 × 165 | SLP2GF02N3E20 | 2.9 |
| | 20 | 7.6 | 0.5 | 13 | 13 | | 120 | G | 27 | 22 | F | 75 × 58 × 165 | SLP2GF02E3E20 | 2.9 |
| | 20 | 7.6 | 0.5 | 13 | 13 | 8 | 120 | G | 27 | 22 | F | 75 × 58 × 165 | SLP2GF02V3E20 | 2.9 |
| 1 " | 20 | 7.6 | 0.5 | 13 | 13 | 8 | 80 | G | 27 | 22 | F | 81 × 58 × 171 | SLP2GF02N3G20 | 3.0 |
| | 20 | 7.6 | 0.5 | 13 | 13 | | 120 | G | 27 | 22 | F | 81 × 58 × 171 | SLP2GF02E3G20 | 3.0 |
| | 20 | 7.6 | 0.5 | 13 | 13 | 8 | 120 | G | 27 | 22 | F | 81 × 58 × 171 | SLP2GF02V3G20 | 3.0 |
| | 25 | 12 | 0.5 | 13 | 13 | 8 | 80 | G | 27 | 22 | F | 96 × 70 × 178 | SLP2GF02N3G25 | 3.1 |
| | 25 | 12 | 0.5 | 13 | 13 | | 120 | G | 27 | 22 | F | 96 × 70 × 178 | SLP2GF02E3G25 | 3.1 |
| | 25 | 12 | 0.5 | 13 | 13 | 8 | 120 | G | 27 | 22 | F | 96 × 70 × 178 | SLP2GF02V3G25 | 3.1 |
| 1 1/4 " | 35 | 22 | 0.5 | 8 | 8 | 8 | 80 | G | 27 | 22 | F | 131 × 96 × 197 | SLP2GF02N3H35 | 4.6 |
| | 35 | 22 | 0.5 | 8 | 8 | | 120 | G | 27 | 22 | F | 131 × 96 × 197 | SLP2GF02E3H35 | 4.6 |
| | 35 | 22 | 0.5 | 8 | 8 | 8 | 120 | G | 27 | 22 | F | 131 × 96 × 197 | SLP2GF02V3H35 | 4.6 |
| 1 1/2 " | 40 | 30 | 0.5 | 8 | 8 | 8 | 80 | G | 27 | 22 | F | 131 × 96 × 197 | SLP2GF02N3J40 | 4.5 |
| | 40 | 30 | 0.5 | 8 | 8 | | 120 | G | 27 | 22 | F | 131 × 96 × 197 | SLP2GF02E3J40 | 4.5 |
| | 40 | 30 | 0.5 | 8 | 8 | 8 | 120 | G | 27 | 22 | F | 131 × 96 × 197 | SLP2GF02V3J40 | 4.5 |
| 2 " | 40 | 30 | 0.5 | 8 | 8 | 8 | 80 | G | 27 | 22 | F | 136 × 96 × 210 | SLP2GF02N3K40 | 4.7 |
| | 40 | 30 | 0.5 | 8 | 8 | | 120 | G | 27 | 22 | F | 136 × 96 × 210 | SLP2GF02E3K40 | 4.7 |
| | 40 | 30 | 0.5 | 8 | 8 | 8 | 120 | G | 27 | 22 | F | 136 × 96 × 210 | SLP2GF02V3K40 | 4.7 |
| | 50 | 48 | 0.5 | 8 | 8 | 8 | 80 | G | 27 | 22 | F | 165 × 120 × 218 | SLP2GF02N3K50 | 6.3 |
| | 50 | 48 | 0.5 | 8 | 8 | | 120 | G | 27 | 22 | F | 165 × 120 × 218 | SLP2GF02E3K50 | 6.3 |
| | 50 | 48 | 0.5 | 8 | 8 | 8 | 120 | G | 27 | 22 | F | 165 × 120 × 218 | SLP2GF02V3K50 | 6.3 |

# SLP Series 2/2-Way Stainless Steel Flange Flameproof Solenoid Valve <Normally Open>



## External Dimensions

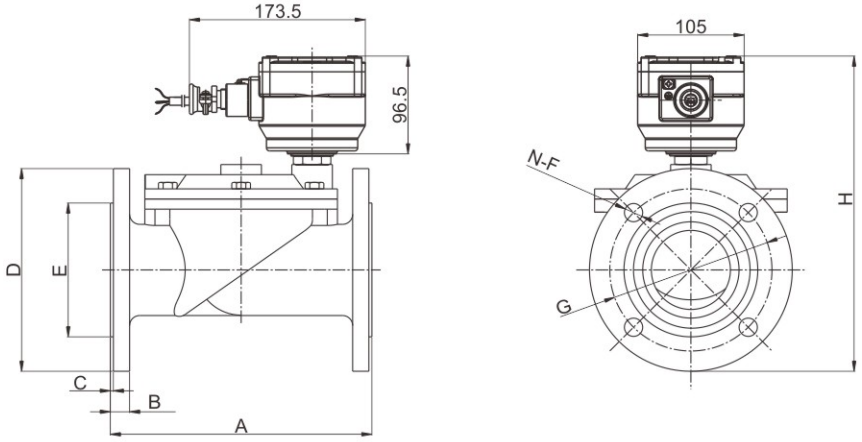


| Model | A | B | C | ΦD | ΦE | N-ΦF | ΦG | H |
|---|---|---|---|---|---|---|---|---|
| DN25 | 134 | 13 | 2 | 110 | 58 | 4-14 | 85 | 214 |
| DN32 | 160 | 15 | 2 | 135 | 74 | 4-18 | 100 | 237 |
| DN40 | 160 | 15 | 2 | 145 | 84 | 4-18 | 110 | 242 |
| DN50 | 200 | 16 | 2 | 160 | 88 | 4-18 | 125 | 259 |
| DN65 | 250 | 19 | 3 | 185 | 118 | 4-18 | 145 | 298 |
| DN80 | 270 | 19 | 3 | 200 | 134 | 4-18 | 160 | 313 |
| DN100 | 340 | 21 | 3 | 220 | 162 | 8-18 | 180 | 342 |

# SLP Series 2/2-Way Stainless Steel Flange Flameproof Solenoid Valve <Normally Open>

## Valve Selection List (Flange)

| Orifice mm | CV Factor | Operating pressure differential(kgf/cm²) | | | | | | | Max. fluids Temp. ℃ | Coil Type | Power consumption | | Coil Grade | Model Code 220VAC | Weight KG |
|---|---|---|---|---|---|---|---|---|---|---|---|---|---|---|---|
| | | Min. | Max. | | | | | | | | VA | W | | | |
| | | | Air Gas | | Water Hot water Liquid | | Light oil | | | | AC 220V | DC 24 | | | |
| | | | AC | DC | AC | DC | AC | DC | | | | | | | |
| 25 | 12 | 0.5 | 13 | 13 | 13 | 13 | 8 | 8 | 80 | G | 27 | 22 | F | SLP2GF02N3F25 | 4.6 |
| 25 | 12 | 0.5 | 13 | 13 | 13 | 13 | | | 120 | G | 27 | 22 | F | SLP2GF02E3F25 | 4.6 |
| 25 | 12 | 0.5 | 13 | 13 | 13 | 13 | 8 | 8 | 120 | G | 27 | 22 | F | SLP2GF02V3F25 | 4.6 |
| 35 | 22 | 0.5 | 13 | 13 | 13 | 13 | 8 | 8 | 80 | G | 27 | 22 | F | SLP2GF02N3F35 | 6.9 |
| 35 | 22 | 0.5 | 13 | 13 | 13 | 13 | | | 120 | G | 27 | 22 | F | SLP2GF02E3F35 | 6.9 |
| 35 | 22 | 0.5 | 13 | 13 | 13 | 13 | 8 | 8 | 120 | G | 27 | 22 | F | SLP2GF02V3F35 | 6.9 |
| 40 | 30 | 0.5 | 13 | 13 | 13 | 13 | 8 | 8 | 80 | G | 27 | 22 | F | SLP2GF02N3F40 | 7.2 |
| 40 | 30 | 0.5 | 13 | 13 | 13 | 13 | | | 120 | G | 27 | 22 | F | SLP2GF02E3F40 | 7.2 |
| 40 | 30 | 0.5 | 13 | 13 | 13 | 13 | 8 | 8 | 120 | G | 27 | 22 | F | SLP2GF02V3F40 | 7.2 |
| 50 | 48 | 0.5 | 13 | 13 | 13 | 13 | 8 | 8 | 80 | G | 27 | 22 | F | SLP2GF02N3F50 | 9.8 |
| 50 | 48 | 0.5 | 13 | 13 | 13 | 13 | | | 120 | G | 27 | 22 | F | SLP2GF02E3F50 | 9.8 |
| 50 | 48 | 0.5 | 13 | 13 | 13 | 13 | 8 | 8 | 120 | G | 27 | 22 | F | SLP2GF02V3F50 | 9.8 |
| 65 | 52 | 1 | 8 | 8 | 8 | 8 | 6 | 6 | 80 | G | 27 | 22 | F | SLP2GF02N3F65 | 15.3 |
| 65 | 52 | 1 | 8 | 8 | 8 | 8 | | | 120 | G | 27 | 22 | F | SLP2GF02E3F65 | 15.3 |
| 65 | 52 | 1 | 8 | 8 | 8 | 8 | 6 | 6 | 120 | G | 27 | 22 | F | SLP2GF02V3F65 | 15.3 |
| 80 | 80 | 1 | 8 | 8 | 8 | 8 | 6 | 6 | 80 | G | 27 | 22 | F | SLP2GF02N3F80 | 17.4 |
| 80 | 80 | 1 | 8 | 8 | 8 | 8 | | | 120 | G | 27 | 22 | F | SLP2GF02E3F80 | 17.4 |
| 80 | 80 | 1 | 8 | 8 | 8 | 8 | 6 | 6 | 120 | G | 27 | 22 | F | SLP2GF02V3F80 | 17.4 |
| 100 | 128 | 1 | 8 | 8 | 8 | 8 | 6 | 6 | 80 | G | 27 | 22 | F | SLP2GF02N3F100 | 23.8 |
| 100 | 128 | 1 | 8 | 8 | 8 | 8 | | | 120 | G | 27 | 22 | F | SLP2GF02E3F100 | 23.8 |
| 100 | 128 | 1 | 8 | 8 | 8 | 8 | 6 | 6 | 120 | G | 27 | 22 | F | SLP2GF02V3F100 | 23.8 |

# SLA Series 2/2-way Flameproof Solenoid Valve

## Product Feature

The product adopts piston type pilot structure, high pressure, large flow, long service life, serialized production, wide range of application

Body material：Forged Brass、SS304 Stainless steel、SS316Stainless steel

Ambient temp：-20℃~+55℃

Atmospheric pressure：80~110kpa Relative humidity：≤95%（+25℃）

Voltage：AC220V 、DC24V（Other voltage can ask the company）

Seals：PTFE、NBR、EPDM、VITON

Flame-proof grade：Ex d IIB T4 Gb

Explosion-proof standard：GB3836.1、GB3836.2。

Temperature lever T4:Safe object surface temperature ≤135℃

It is suitable for other explosive gas environment except coal mine gas and the place containing Ⅱ A, Ⅱ B T1~T4 explosive gas environment zone 1 and 2

Flow as the arrow ,mounts in any position ; best position is solenoid vertical and upright direction

Specifications for thread of cable outlet device:M20x1.5If the cable protective cover needs to be installed, the certified explosion-proof connector must be used

## Solenoid Valves Numbering System for Order

| 1 | 2 | 3 | 4 | 5 | 6 | 7 | 8 | 9 | 10 |
|---|---|---|---|---|---|---|---|---|---|
| Valve Series | Mode of Operation | Coil Type | Coil Class | Voltage | Seal Material | Body Material | Pipe Size | Orifice (mm) | Options |
| SLA | 1 | G | F | 02 | N | 1 | D | 15 | |
| | 1= Normally Closed<br>2= Normally Open | G= Flameproof coil | F= F grade<br>H= H grade | 02= AC220V<br>13= DC24V<br>Other voltage can ask the company | N=NBR<br>E=EPDM<br>V=VITON<br>T=Teflon | 1=Forged Brass<br>4=SS304<br>3=SS316 | C=3/8 "<br>D=1/2 " | 15=15.0 | N=NPT |
| | | | | | | | E=3/4 " | 20=20.0 | |
| | | | | | | | G=1 " | 25=25.0 | |
| | | | | | | | H=1 1/4 "<br>J=1 1/2 " | 35=35.0 | |
| | | | | | | | K=2 " | 50=50.0 | |
| | | | | | | 4=SS304 | F= Flange connection | 25=25.0<br>35=35.0<br>40=40.0<br>50=50.0 | |

# SLA Brass Series 2/2-way Flameproof Solenoid Valve

## <Normally Closed>

### Product Feature

2/2 way normally closed solenoid valve, closed when de-energized open , open when energized

Body material：Forged Brass

Maximum pressure：40kgf/cm$^2$

Ambient temp：-20℃~+55℃ Medium temperature：0℃~+185℃

Atmospheric pressure：80~110kpa Relative humidity：≤95%(+25℃)

Voltage：AC220V 、DC24V(Other voltage can ask the company)

Seals：PTFE、NBR、EPDM、VITON

Flame-proof grade：Ex d IIB T4 Gb

Explosion-proof standard：GB3836.1、GB3836.2。

It is suitable for other explosive gas environment except coal mine gas and the place containing Ⅱ A, Ⅱ B T1~T4 explosive gas environment zone 1 and 2

Flow as the arrow ,mounts in any position ; best position is solenoid vertical and upright direction

Specifications for thread of cable outlet device:M20x1.5
If the cable protective cover needs to be installed, the certified explosion-proof connector must be used



### External Dimensions

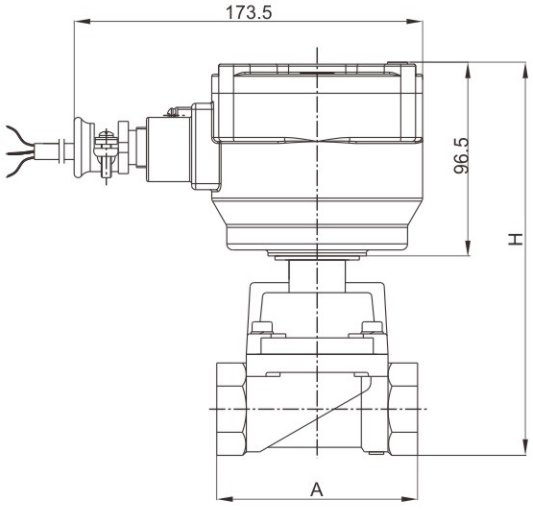


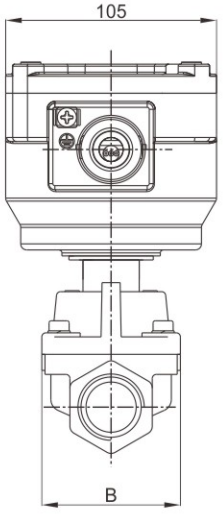


| DN(mm) | Pipe G | A | B | H |
|---|---|---|---|---|
| Φ15 | 3/8" | 75 | 52 | 178 |
| | 1/2" | 75 | 52 | 168 |
| Φ20 | 3/4" | 85 | 60 | 186 |
| Φ25 | 1" | 100 | 70 | 192 |
| Φ35 | 1 1/4" | 120 | 90 | 211 |
| | 1 1/2" | 120 | 90 | 211 |
| Φ50 | 2" | 150 | 110 | 232 |

# SLA Brass Series 2/2-way Flameproof Solenoid Valve

## <Normally Closed>

### Valve Selection List

| Pipe Size | Orifice mm | CV Factor | Operating pressure differential(kgf/cm²) | | | | | | | | Max. fluids Temp. ℃ | Coil Type | Power consumption | | Coil Grade | Model Code 220VAC | Weight KG |
|---|---|---|---|---|---|---|---|---|---|---|---|---|---|---|---|---|---|
| | | | Min. | Max. | | | | | | | | | VA | W | | | |
| | | | | Air Gas | | Water Hot water Liquid | | Light oil | | steam | | | AC 220V | DC 24V | | | |
| | | | | AC | DC | AC | DC | AC | DC | | | | | | | | |
| 3/8 " | 15 | 4.5 | 0.5 | 25 | 20 | 25 | 20 | 20 | 20 | | 120 | G | 27 | 22 | F | SLA1GF02V1C15 | 2.8 |
| | 15 | 4.5 | 0.5 | 10 | 10 | 10 | 10 | 10 | 10 | 8 | 185 | G | 27 | 22 | H | SLA1GH02T1C15 | |
| 1/2 " | 15 | 4.5 | 0.5 | 25 | 20 | 25 | 20 | 20 | 20 | | 120 | G | 27 | 22 | F | SLA1GF02V1D15 | 2.8 |
| | 15 | 4.5 | 0.5 | 10 | 10 | 10 | 10 | 10 | 10 | 8 | 185 | G | 27 | 22 | H | SLA1GH02T1D15 | |
| 3/4 " | 20 | 9.0 | 0.5 | 25 | 20 | 25 | 20 | 20 | 20 | | 120 | G | 27 | 22 | F | SLA1GF02V1E20 | 3.1 |
| | 20 | 9.0 | 0.5 | 10 | 10 | 10 | 10 | 10 | 10 | 8 | 185 | G | 27 | 22 | H | SLA1GH02T1E20 | |
| 1 " | 25 | 13 | 0.5 | 25 | 20 | 25 | 20 | 20 | 20 | | 120 | G | 27 | 22 | F | SLA1GF02V1G25 | 3.5 |
| | 25 | 13 | 0.5 | 10 | 10 | 10 | 10 | 10 | 10 | 8 | 185 | G | 27 | 22 | H | SLA1GH02T1G25 | |
| 1 1/4 " | 35 | 26 | 0.5 | 25 | 20 | 25 | 20 | 20 | 20 | | 120 | G | 27 | 22 | F | SLA1GF02V1H35 | 5.2 |
| | 35 | 26 | 0.5 | 10 | 10 | 10 | 10 | 10 | 10 | 8 | 185 | G | 27 | 22 | H | SLA1GH02T1H35 | |
| 1 1/2 " | 35 | 26 | 0.5 | 25 | 20 | 25 | 20 | 20 | 20 | | 120 | G | 27 | 22 | F | SLA1GF02V1J35 | 5.1 |
| | 35 | 26 | 0.5 | 10 | 10 | 10 | 10 | 10 | 10 | 8 | 185 | G | 27 | 22 | H | SLA1GH02T1J35 | |
| 2 " | 45 | 45 | 0.5 | 25 | 20 | 25 | 20 | 20 | 20 | | 120 | G | 27 | 22 | F | SLA1GF02V1K50 | 6.1 |
| | 45 | 45 | 0.5 | 10 | 10 | 10 | 10 | 10 | 10 | 8 | 185 | G | 27 | 22 | H | SLA1GH02T1K50 | |

# SLA Stainless steel Series 2/2-way Flameproof Solenoid Valve <Normally Closed>

## Product Feature

2/2 way normally closed solenoid valve, closed when de-energized open , open when energized

Body material：SS304（Standard）,SS316（Customized）

Maximum pressure：40kgf/cm$^2$

Ambient temp：-20℃~+55℃ Medium temperature：0℃~+185℃

Atmospheric pressure：80~110kpa Relative humidity：≤95%(+25℃)

Voltage：AC220V 、DC24V(Other voltage can ask the company)

Seals：PTFE、NBR、EPDM、VITON

Flame-proof grade：Ex d IIB T4 Gb

Explosion-proof standard：GB3836.1、GB3836.2。

It is suitable for other explosive gas environment except coal mine gas and the place containing Ⅱ A, Ⅱ B T1~T4 explosive gas environment zone 1 and 2

Flow as the arrow ,mounts in any position ; best position is solenoid vertical and upright direction

Specifications for thread of cable outlet device:M20x1.5
If the cable protective cover needs to be installed, the certified explosion-proof connector must be used



## Valve Selection List

| Pipe Size | Orifice mm | CV Factor | Operating pressure differential(kgf/cm$^2$) | | | | | | | | Max. fluids Temp. ℃ | Coil Type | Power consumption | | Coil Grade | Model Code 220VAC | Weight KG |
|---|---|---|---|---|---|---|---|---|---|---|---|---|---|---|---|---|---|
| | | | Min. | Max. | | | | | | | | | VA | W | | | |
| | | | | Air Gas | | Water Hot water Liquid | | Light oil | | steam | | | AC 220V | DC 24V | | | |
| | | | | AC | DC | AC | DC | AC | DC | | | | | | | | |
| 3/8 " | 15 | 4.5 | 0.5 | 25 | 20 | 25 | 20 | 20 | 20 | | 120 | G | 27 | 22 | F | SLA1GF02V4C15 | 2.8 |
| | 15 | 4.5 | 0.5 | 10 | 10 | 10 | 10 | 10 | 10 | 8 | 185 | G | 27 | 22 | H | SLA1GH02T4C15 | |
| 1/2 " | 15 | 4.5 | 0.5 | 25 | 20 | 25 | 20 | 20 | 20 | | 120 | G | 27 | 22 | F | SLA1GF02V4D15 | 2.8 |
| | 15 | 4.5 | 0.5 | 10 | 10 | 10 | 10 | 10 | 10 | 8 | 185 | G | 27 | 22 | H | SLA1GH02T4D15 | |
| 3/4 " | 20 | 9.0 | 0.5 | 25 | 20 | 25 | 20 | 20 | 20 | | 120 | G | 27 | 22 | F | SLA1GF02V4E20 | 3.1 |
| | 20 | 9.0 | 0.5 | 10 | 10 | 10 | 10 | 10 | 10 | 8 | 185 | G | 27 | 22 | H | SLA1GH02T4E20 | |
| 1 " | 25 | 13 | 0.5 | 25 | 20 | 25 | 20 | 20 | 20 | | 120 | G | 27 | 22 | F | SLA1GF02V4G25 | 3.5 |
| | 25 | 13 | 0.5 | 10 | 10 | 10 | 10 | 10 | 10 | 8 | 185 | G | 27 | 22 | H | SLA1GH02T4G25 | |
| 1 1/4 " | 35 | 26 | 0.5 | 25 | 20 | 25 | 20 | 20 | 20 | | 120 | G | 27 | 22 | F | SLA1GF02V4H35 | 5.2 |
| | 35 | 26 | 0.5 | 10 | 10 | 10 | 10 | 10 | 10 | 8 | 185 | G | 27 | 22 | H | SLA1GH02T4H35 | |
| 1 1/2 " | 35 | 26 | 0.5 | 25 | 20 | 25 | 20 | 20 | 20 | | 120 | G | 27 | 22 | F | SLA1GF02V4J35 | 5.1 |
| | 35 | 26 | 0.5 | 10 | 10 | 10 | 10 | 10 | 10 | 8 | 185 | G | 27 | 22 | H | SLA1GH02T4J35 | |
| 2 " | 45 | 45 | 0.5 | 25 | 20 | 25 | 20 | 20 | 20 | | 120 | G | 27 | 22 | F | SLA1GF02V4K50 | 5.8 |
| | 45 | 45 | 0.5 | 10 | 10 | 10 | 10 | 10 | 10 | 8 | 185 | G | 27 | 22 | H | SLA1GH02T4K50 | |

# SLA Stainless steel Flange Series 2/2-way Flameproof Solenoid Valve <Normally Closed>

## Valve Selection List (Flange)

| Orifice mm | CV Factor | Operating pressure differential(kgf/cm²) | | | | | | | | Max. fluids Temp. ℃ | Coil Type | Power consumption | | Coil Grade | Model Code 220VAC | Weight KG |
|---|---|---|---|---|---|---|---|---|---|---|---|---|---|---|---|---|
| | | Min. | Max. | | | | | | | | | VA | W | | | |
| | | | Air Gas | | Water Hot water Liquid | | Light oil | | steam | | | AC 220V | DC 24V | | | |
| | | | AC | DC | AC | DC | AC | DC | | | | | | | | |
| 25 | 13 | 0.5 | 25 | 20 | 25 | 20 | 20 | 20 | | 20 | G | 27 | 22 | F | SLA1GF02V4F25 | 5.0 |
| 25 | 13 | 0.5 | 10 | 10 | 10 | 10 | 10 | 10 | 8 | 10 | G | 27 | 22 | H | SLA1GH02T4F25 | |
| 35 | 26 | 0.5 | 25 | 20 | 25 | 20 | 20 | 20 | | 20 | G | 27 | 22 | F | SLA1GF02V4F35 | 7.6 |
| 35 | 26 | 0.5 | 10 | 10 | 10 | 10 | 10 | 10 | 8 | 10 | G | 27 | 22 | H | SLA1GH02T4F35 | |
| 40 | 26 | 0.5 | 25 | 20 | 25 | 20 | 20 | 20 | | 20 | G | 27 | 22 | F | SLA1GF02V4F40 | 8.1 |
| 40 | 26 | 0.5 | 10 | 10 | 10 | 10 | 10 | 10 | 8 | 10 | G | 27 | 22 | H | SLA1GH02T4F40 | |
| 50 | 45 | 0.5 | 25 | 20 | 25 | 20 | 20 | 20 | | 20 | G | 27 | 22 | F | SLA1GF02V4F50 | 8.9 |
| 50 | 45 | 0.5 | 10 | 10 | 10 | 10 | 10 | 10 | 8 | 10 | G | 27 | 22 | H | SLA1GH02T4F50 | |

## External Dimensions

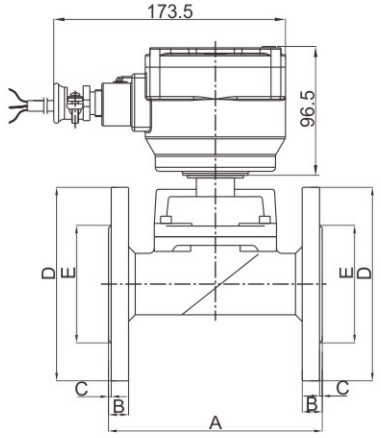


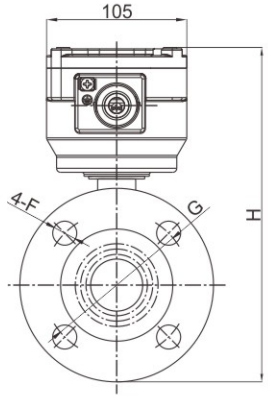




| Model | A | B | C | ΦD | ΦE | N-ΦF | ΦG | H |
|---|---|---|---|---|---|---|---|---|
| DN25 | 134 | 13 | 2 | 110 | 58 | 14 | 85 | 224 |
| DN32 | 160 | 15 | 2 | 135 | 76 | 18 | 100 | 246 |
| DN40 | 160 | 15 | 2 | 145 | 84 | 18 | 110 | 251 |
| DN50 | 200 | 16 | 2 | 155 | 88 | 18 | 125 | 270 |

# SLA Brass Series 2/2-way Flameproof Solenoid Valve

## <Normally Open>

### Product Feature

2/2 way normally open solenoid valve, open when de-energized open , closed when energized

Body material：Forged Brass

Maximum pressure：12kgf/cm$^2$

Ambient temp：-20℃~+55℃

Atmospheric pressure：80~110kpa Relative humidity：≤95%(+25℃)

Voltage：AC220V 、DC24V(Other voltage can ask the company)

Seals：PTFE、NBR、EPDM、VITON

Flame-proof grade：Ex d IIB T4 Gb

Explosion-proof standard：GB3836.1、GB3836.2。

It is suitable for other explosive gas environment except coal mine gas and the place containing Ⅱ A, Ⅱ B T1~T4 explosive gas environment zone 1 and 2

Flow as the arrow ,mounts in any position ; best position is solenoid vertical and upright direction

Specifications for thread of cable outlet device:M20x1.5
If the cable protective cover needs to be installed, the certified explosion-proof connector must be used



### External Dimensions

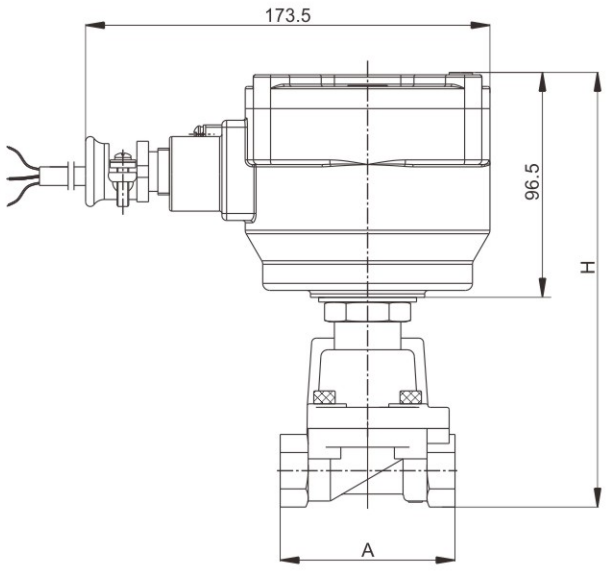


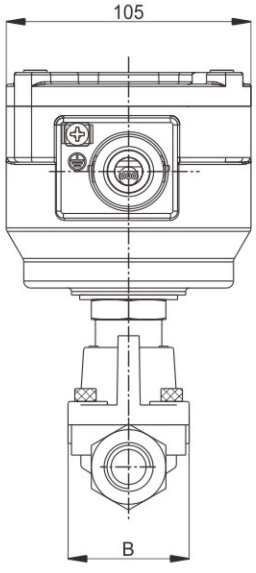


| DN(mm) | Pipe G | A | B | H |
|---|---|---|---|---|
| Φ15 | 3/8" | 75 | 52 | 186 |
| | 1/2" | 75 | 52 | 186 |
| Φ20 | 3/4" | 85 | 60 | 194 |
| Φ25 | 1" | 100 | 70 | 200 |
| Φ35 | 1 1/4" | 120 | 90 | 219 |
| | 1 1/2" | 120 | 90 | 219 |
| Φ50 | 2" | 150 | 110 | 240 |

# SLA Brass Series 2/2-way Flameproof Solenoid Valve

## <Normally Open>

### Valve Selection List

| Pipe Size | Orifice mm | CV Factor | Operating pressure differential(kgf/cm²) | | | | | Max. fluids Temp. ℃ | Coil Type | Power consumption | | Coil Grade | Model Code 220VAC | Weight KG |
|---|---|---|---|---|---|---|---|---|---|---|---|---|---|---|
| | | | Min. | Max. | | | | | | VA | W | | | |
| | | | | Air Gas | Water Hot water Liquid | Light oil | steam | | | AC 220V | DC 24V | | | |
| 3/8 " | 15 | 4.5 | 0.5 | 10 | 10 | | 10 | 120 | G | 27 | 22 | F | SLA2GF02E1C15 | 3.0 |
| | 15 | 4.5 | 0.5 | 10 | 10 | 10 | 10 | 120 | G | 27 | 22 | F | SLA2GF02V1C15 | |
| 1/2 " | 15 | 4.5 | 0.5 | 10 | 10 | | 10 | 120 | G | 27 | 22 | F | SLA2GF02E1D15 | 3.0 |
| | 15 | 4.5 | 0.5 | 10 | 10 | 10 | 10 | 120 | G | 27 | 22 | F | SLA2GF02V1D15 | |
| 3/4 " | 20 | 9.0 | 0.5 | 10 | 10 | | 10 | 120 | G | 27 | 22 | F | SLA2GF02E1E20 | 3.3 |
| | 20 | 9.0 | 0.5 | 10 | 10 | 10 | 10 | 120 | G | 27 | 22 | F | SLA2GF02V1E20 | |
| 1 " | 25 | 13 | 0.5 | 10 | 10 | | 10 | 120 | G | 27 | 22 | F | SLA2GF02E1G25 | 3.7 |
| | 25 | 13 | 0.5 | 10 | 10 | 10 | 10 | 120 | G | 27 | 22 | F | SLA2GF02V1G25 | |
| 1 1/4 " | 35 | 26 | 0.5 | 6 | 6 | | 6 | 120 | G | 27 | 22 | F | SLA2GF02E1H35 | 5.4 |
| | 35 | 26 | 0.5 | 6 | 6 | 6 | 6 | 120 | G | 27 | 22 | F | SLA2GF02V1H35 | |
| 1 1/2 " | 35 | 26 | 0.5 | 6 | 6 | | 6 | 120 | G | 27 | 22 | F | SLA2GF02E1J35 | 5.3 |
| | 35 | 26 | 0.5 | 6 | 6 | 6 | 6 | 120 | G | 27 | 22 | F | SLA2GF02V1J35 | |
| 2 " | 45 | 45 | 0.5 | 6 | 6 | | 6 | 120 | G | 27 | 22 | F | SLA2GF02E1K50 | 6.3 |
| | 45 | 45 | 0.5 | 6 | 6 | 6 | 6 | 120 | G | 27 | 22 | F | SLA2GF02V1K50 | |

# SLA Stainless steel Series 2/2-way Flameproof Solenoid Valve <Normally Open>

## Product Feature

2/2 way normally open solenoid valve, open when de-energized open , closed when energized

Body material：SS304（Standard）,SS316（Customized）

Maximum pressure：12kgf/cm²

Ambient temp：-20℃~+55℃

Atmospheric pressure：80~110kpa Relative humidity：≤95%(+25℃)

Voltage：AC220V 、DC24V(Other voltage can ask the company)

Seals：PTFE、NBR、EPDM、VITON

Flame-proof grade：Ex d IIB T4 Gb

Explosion-proof standard：GB3836.1、GB3836.2。

It is suitable for other explosive gas environment except coal mine gas and the place containing Ⅱ A, Ⅱ B T1~T4 explosive gas environment zone 1 and 2

Flow as the arrow ,mounts in any position ; best position is solenoid vertical and upright direction

Specifications for thread of cable outlet device:M20x1.5
If the cable protective cover needs to be installed, the certified explosion-proof connector must be used



## Valve Selection List

| Pipe Size | Orifice mm | CV Factor | Operating pressure differential(kgf/cm²) | | | | | Max. fluids Temp. ℃ | Coil Type | Power consumption | | Coil Grade | Model Code 220VAC | Weight KG |
|---|---|---|---|---|---|---|---|---|---|---|---|---|---|---|
| | | | Min. | Max. | | | | | | VA | W | | | |
| | | | | Air Gas | Water Hot water Liquid | Light oil | steam | | | AC 220V | DC 24V | | | |
| 3/8 " | 15 | 4.5 | 0.5 | 10 | 10 | | 10 | 120 | G | 27 | 22 | F | SLA2GF02E4C15 | 3.0 |
| | 15 | 4.5 | 0.5 | 10 | 10 | 10 | 10 | 120 | G | 27 | 22 | F | SLA2GF02V4C15 | |
| 1/2 " | 15 | 4.5 | 0.5 | 10 | 10 | | 10 | 120 | G | 27 | 22 | F | SLA2GF02E4D15 | 3.0 |
| | 15 | 4.5 | 0.5 | 10 | 10 | 10 | 10 | 120 | G | 27 | 22 | F | SLA2GF02V4D15 | |
| 3/4 " | 20 | 9.0 | 0.5 | 10 | 10 | | 10 | 120 | G | 27 | 22 | F | SLA2GF02E4E20 | 3.3 |
| | 20 | 9.0 | 0.5 | 10 | 10 | 10 | 10 | 120 | G | 27 | 22 | F | SLA2GF02V4E20 | |
| 1 " | 25 | 13 | 0.5 | 10 | 10 | | 10 | 120 | G | 27 | 22 | F | SLA2GF02E4G25 | 3.7 |
| | 25 | 13 | 0.5 | 10 | 10 | 10 | 10 | 120 | G | 27 | 22 | F | SLA2GF02V4G25 | |
| 1 1/4 " | 35 | 26 | 0.5 | 6 | 6 | | 6 | 120 | G | 27 | 22 | F | SLA2GF02E4H35 | 5.4 |
| | 35 | 26 | 0.5 | 6 | 6 | 6 | 6 | 120 | G | 27 | 22 | F | SLA2GF02V4H35 | |
| 1 1/2 " | 35 | 26 | 0.5 | 6 | 6 | | 6 | 120 | G | 27 | 22 | F | SLA2GF02E4J35 | 5.3 |
| | 35 | 26 | 0.5 | 6 | 6 | 6 | 6 | 120 | G | 27 | 22 | F | SLA2GF02V4J35 | |
| 2 " | 45 | 45 | 0.5 | 6 | 6 | | 6 | 120 | G | 27 | 22 | F | SLA2GF02E4K50 | 6.3 |
| | 45 | 45 | 0.5 | 6 | 6 | 6 | 6 | 120 | G | 27 | 22 | F | SLA2GF02V4K50 | |

# SLA Stainless steel Flange Series 2/2-way Flameproof Solenoid Valve <Normally Open>

## Valve Selection List (Flange)

| Orifice mm | CV Factor | Operating pressure differential(kgf/cm²) | | | | | Max. fluids Temp. ℃ | Coil Type | Power consumption | | Coil Grade | Model Code 220VAC | Weight KG |
|---|---|---|---|---|---|---|---|---|---|---|---|---|---|
| | | Min. | Max. | | | | | | VA | W | | | |
| | | | Air Gas | Water Hot water Liquid | Light oil | steam | | | AC 220V | DC 24V | | | |
| 25 | 13 | 0.5 | 10 | 10 | | 10 | 120 | G | 27 | 22 | F | SLA2GF02E4F25 | 5.2 |
| 25 | 13 | 0.5 | 10 | 10 | 10 | 10 | 120 | G | 27 | 22 | F | SLA2GF02V4F25 | |
| 35 | 26 | 0.5 | 6 | 6 | | 6 | 120 | G | 27 | 22 | F | SLA2GF02E4F35 | 7.8 |
| 35 | 26 | 0.5 | 6 | 6 | 6 | 6 | 120 | G | 27 | 22 | F | SLA2GF02V4F35 | |
| 40 | 26 | 0.5 | 6 | 6 | | 6 | 120 | G | 27 | 22 | F | SLA2GF02E4F40 | 8.3 |
| 40 | 26 | 0.5 | 6 | 6 | 6 | 6 | 120 | G | 27 | 22 | F | SLA2GF02V4F40 | |
| 50 | 45 | 0.5 | 6 | 6 | | 6 | 120 | G | 27 | 22 | F | SLA2GF02E4F50 | 9.1 |
| 50 | 45 | 0.5 | 6 | 6 | 6 | 6 | 120 | G | 27 | 22 | F | SLA2GF02V4F50 | |

## External Dimensions

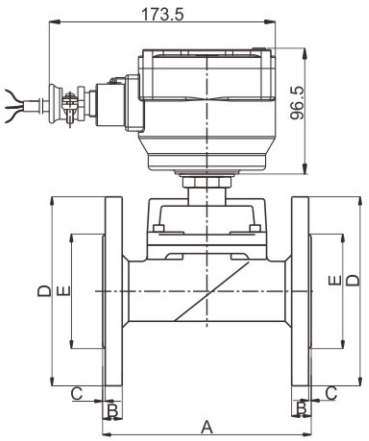


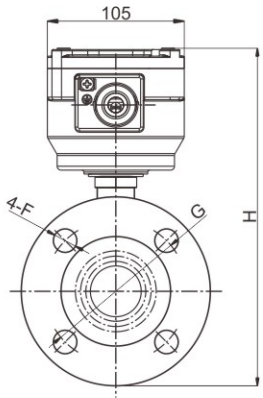




| Model | A | B | C | ΦD | ΦE | N-ΦF | ΦG | H |
|---|---|---|---|---|---|---|---|---|
| DN25 | 134 | 13 | 2 | 110 | 58 | 14 | 85 | 233 |
| DN32 | 160 | 15 | 2 | 135 | 76 | 18 | 100 | 254 |
| DN40 | 160 | 15 | 2 | 145 | 84 | 18 | 110 | 259 |
| DN50 | 200 | 16 | 2 | 155 | 88 | 18 | 125 | 278 |

# SLG Series 2/2-way High Pressure Flameproof Solenoid Valve <Normally Closed>

## Product Feature

2/2 way normally closed solenoid valve, closed when de-energized open , open when energized

Working pressure：0~100kgf/cm$^2$

Body material：Forged Brass、SS316

Ambient temp：-20℃~+55℃ Medium temperature：0℃~+120℃

Atmospheric pressure：80~110kpa Relative humidity：≤95%(+25℃)

Voltage：AC220V 、DC24V(Other voltage can ask the company)

Seals：NBR、EPDM、VITON

Flame-proof grade：Ex d IIB T4 Gb

Explosion-proof standard ：GB3836.1、GB3836.2。

It is suitable for other explosive gas environment except coal mine gas and the place containing Ⅱ A, Ⅱ B T1~T4 explosive gas environment zone 1 and 2

Flow as the arrow ,mounts in any position ; best position is solenoid vertical and upright direction

Specifications for thread of cable outlet device:M20x1.5
If the cable protective cover needs to be installed, the certified explosion-proof connector must be used



## Solenoid Valves Numbering System for Order

| 1 | 2 | 3 | 4 | 5 | 6 | 7 | 8 | 9 | 10 |
|---|---|---|---|---|---|---|---|---|---|
| Valve Series | Mode of Operation | Coil Type | Coil Class | Voltage | Seal Material | Body Material | Pipe Size | Orifice (mm) | Options |
| SLG | 1 | G | F | 02 | N | 1 | D | 15 | |
| | 1= Normally Closed | G= Flameproof coil | F= F grade | 02= AC220V<br>13= DC24V<br>Other voltage can ask the company | N=NBR<br>E=EPDM<br>V=VITON<br>T=PTFE | 1=Forged Brass<br>3=SS316<br>4=SS304 | A=1/8" | 01=1.0<br>C1=1.2<br>C2=1.5<br>02=2.0<br>C3=2.5 | N=NPT |
| | | | | | | | B=1/4 " | 01=1.0<br>C1=1.2<br>C2=1.5<br>02=2.0<br>C3=2.5 | |
| | | | | | | | C=3/8 "<br>D=1/2 " | 15=15.0 | |
| | | | | | | | E=3/4 " | 20=20.0 | |
| | | | | | | | G=1 " | 25=25.0 | |

# SLG Series 2/2-way High Pressure Flameproof Solenoid Valve <Normally Closed>

## Product Feature

2/2 way normally closed solenoid valve, closed when de-energized open , open when energized

Body material：Forged Brass、SS304、SS316

Ambient temp：-20℃~+55℃ Medium temperature：0℃~+120℃

Atmospheric pressure：80~110kpa Relative humidity：≤95%(+25℃)

Voltage：AC220V 、DC24V(Other voltage can ask the company)

Seals：NBR、EPDM、VITON

Flame-proof grade：Ex d IIB T4 Gb

Explosion-proof standard：GB3836.1、GB3836.2。

Temperature lever T4:Safe object surface temperature ≤135℃

It is suitable for other explosive gas environment except coal mine gas and the place containing Ⅱ A, Ⅱ B T1~T4 explosive gas environment zone 1 and 2

Flow as the arrow ,mounts in any position ; best position is solenoid vertical and upright direction

Specifications for thread of cable outlet device:M20x1.5
If the cable protective cover needs to be installed, the certified explosion-proof connector must be used



## External Dimensions

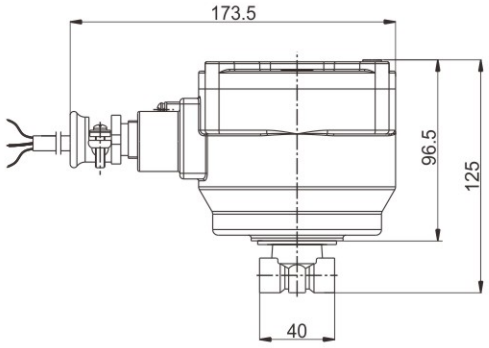


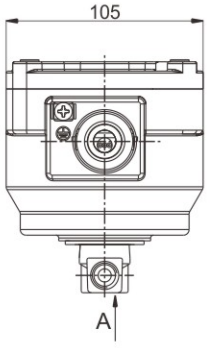


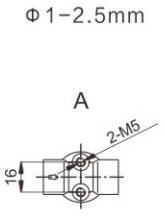


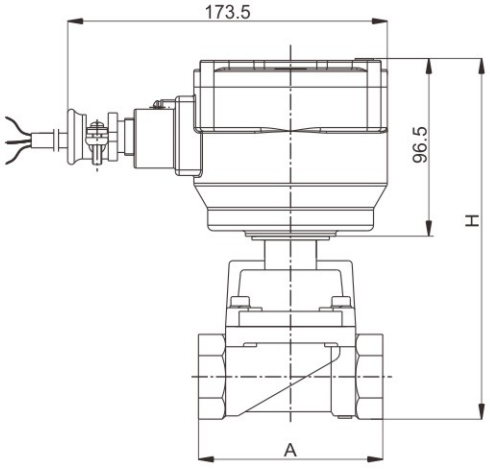


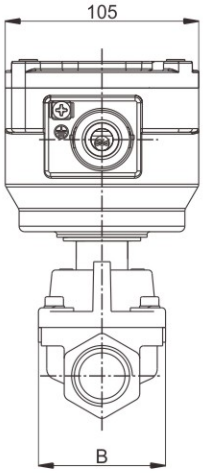


| DN(mm) | Pipe G | A | B | H |
|---|---|---|---|---|
| Φ15 | 3/8" | 75 | 52 | 178 |
| | 1/2" | 75 | 52 | 178 |
| Φ20 | 3/4" | 85 | 60 | 186 |
| Φ25 | 1" | 100 | 70 | 192 |

# SLG Series 2/2-way High Pressure Flameproof Solenoid Valve <Normally Closed>

## Valve Selection List

| Pipe Size | Orifice mm | CV Factor | Operating pressure differential(kgf/cm²) | | | | | | | Max. fluids Temp. ℃ | Coil Type | Power consumption | | Coil Grade | Model Code 220VAC | | Weight KG |
|---|---|---|---|---|---|---|---|---|---|---|---|---|---|---|---|---|---|
| | | | Min. | Max. | | | | | | | | VA | W | | Body material | | |
| | | | | Air Gas | | Water Hot water Liquid | | Light oil | | | | AC 220V | DC 24V | | Forged brass | SS316 | |
| | | | | AC | DC | AC | DC | AC | DC | | | | | | | | |
| 1/8 " | 1.0 | 0.04 | 0 | 100 | 75 | 100 | 75 | 100 | 75 | 120 | G | 27 | 22 | F | SLG1GF02V1A01 | SLG1GF02V3A01 | 2.1 |
| | 1.2 | 0.05 | 0 | 90 | 70 | 90 | 70 | 90 | 70 | 120 | G | 27 | 22 | F | SLG1GF02V1AC1 | SLG1GF02V3AC1 | 2.1 |
| | 1.5 | 0.08 | 0 | 75 | 50 | 75 | 50 | 75 | 50 | 120 | G | 27 | 22 | F | SLG1GF02V1AC2 | SLG1GF02V3AC2 | 2.1 |
| | 2.0 | 0.14 | 0 | 35 | 30 | 35 | 30 | 35 | 30 | 120 | G | 27 | 22 | F | SLG1GF02V1A02 | SLG1GF02V3A02 | 2.1 |
| | 2.5 | 0.23 | 0 | 20 | 15 | 20 | 15 | 20 | 15 | 120 | G | 27 | 22 | F | SLG1GF02V1AC3 | SLG1GF02V3AC3 | 2.1 |
| 1/4 " | 1.0 | 0.04 | 0 | 100 | 75 | 100 | 75 | 100 | 75 | 120 | G | 27 | 22 | F | SLG1GF02V1B01 | SLG1GF02V3B01 | 2.1 |
| | 1.2 | 0.05 | 0 | 90 | 70 | 90 | 70 | 90 | 70 | 120 | G | 27 | 22 | F | SLG1GF02V1BC1 | SLG1GF02V3BC1 | 2.1 |
| | 1.5 | 0.08 | 0 | 75 | 50 | 75 | 50 | 75 | 50 | 120 | G | 27 | 22 | F | SLG1GF02V1BC2 | SLG1GF02V3BC2 | 2.1 |
| | 2.0 | 0.14 | 0 | 35 | 30 | 35 | 30 | 35 | 30 | 120 | G | 27 | 22 | F | SLG1GF02V1B02 | SLG1GF02V3B02 | 2.1 |
| | 2.5 | 0.23 | 0 | 20 | 15 | 20 | 15 | 20 | 15 | 120 | G | 27 | 22 | F | SLG1GF02V1BC3 | SLG1GF02V3BC3 | 2.1 |
| 3/8 " | 15 | 4.2 | 1.0 | 75 | 55 | 75 | 55 | 55 | 35 | 120 | G | 27 | 22 | F | SLG1GF02V1C15 | SLG1GF02V4C15 | 3.1 |
| 1/2 " | 15 | 4.2 | 1.0 | 75 | 55 | 75 | 55 | 55 | 35 | 120 | G | 27 | 22 | F | SLG1GF02V1D15 | SLG1GF02V4D15 | 3.1 |
| 3/4 " | 20 | 7 | 1.0 | 65 | 50 | 65 | 50 | 50 | 30 | 120 | G | 27 | 22 | F | SLG1GF02V1E20 | SLG1GF02V4E20 | 3.4 |
| 1 " | 25 | 11 | 1.0 | 55 | 45 | 55 | 45 | 45 | 30 | 120 | G | 27 | 22 | F | SLG1GF02V1G25 | SLG1GF02V4G25 | 3.7 |

# SLT Series 3/2-way Direct Acting Flameproof Solenoid Valve



## Product Feature

Body material：Forged Brass、Stainless Steel

Ambient temp：-20℃~+55℃ Medium temperature：0℃~+120℃

Atmospheric pressure：80~110kpa Relative humidity：≤95%(+25℃)

Voltage：AC220V 、DC24V(Other voltage can ask the company)

Seals：NBR、EPDM、VITON

Flame-proof grade：Ex d IIB T4 Gb

Explosion-proof standard：GB3836.1、GB3836.2。

Temperature lever T4:Safe object surface temperature ≤135℃

It is suitable for other explosive gas environment except coal mine gas and the place containing Ⅱ A, Ⅱ B T1~T4 explosive gas environment zone 1 and 2

Flow as the arrow ,mounts in any position ; best position is solenoid vertical and upright direction

Specifications for thread of cable outlet device:M20x1.5
If the cable protective cover needs to be installed, the certified explosion-proof connector must be used

## Solenoid Valves Numbering System for Order

| 1 | 2 | 3 | 4 | 5 | 6 | 7 | 8 | 9 | 10 |
|---|---|---|---|---|---|---|---|---|---|
| Valve Series | Mode of Operation | Coil Type | Coil Class | Voltage | Seal Material | Body Material | Pipe Size | Orifice (mm) | Options |
| SLT | 1 | G | F | 02 | N | 1 | A | V1 | N |
| | 1=Normally Closed<br>2=Normally Open<br>3= Diverting<br>4= Universal | G= Flameproof coil | F= F grade | 02= AC220V<br>13= DC24V<br>Other voltage can ask the company | N=NBR<br>E=EPDM<br>V=VITON | 1=Forged Brass<br>4=Round body SS304(General)<br>9=Round copper body<br>3=Round body SS316<br>5=SS316 | A=1/8”<br>B=1/4” | V1=1.5<br>V2=2.0<br>V3=2.5<br>V4=3.0<br>V5=4.0 | N=NPT |
| | | | | | | 1=Forged Brass<br>3=SS316 | B=1/4” | 06=6.0 | |

## External Dimensions

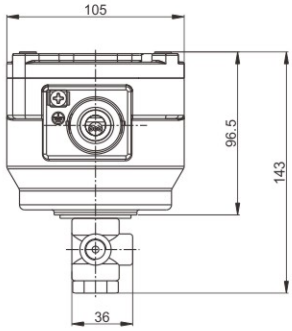


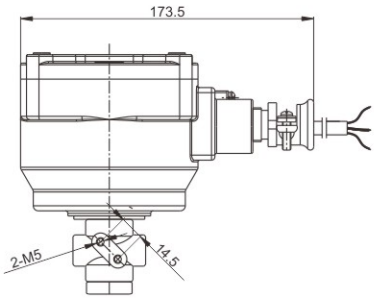


Body:1、5
Net:2.1kg

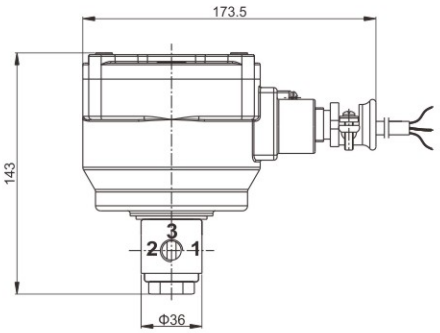


Body:9,4,3
Net:2.2kg

# SLT Series 3/2-way Direct Acting Flameproof Solenoid Valve

## SLT1 Normally Closed Valve Selection List

| Pipe Size | Orifice mm | CV Factor | Operating pressure differential(kgf/cm²) Min. | Max. Air、Gas、Water、Hot water、Liquid AC | Max. Air、Gas、Water、Hot water、Liquid DC | Max. Light oil ≤20CST AC | Max. Light oil ≤20CST DC | Max. fluids Temp. ℃ | Coil Type | Power consumption VA AC 220V | Power consumption W DC 24V | Coil Grade | Model Code 220VAC Body material: Forged brass | Model Code 220VAC Body material: Stainless Steel |
|---|---|---|---|---|---|---|---|---|---|---|---|---|---|---|
| 1/8" | 1.5 | 0.07 | 0 | 13 | 11 | 13 | 11 | 80 | G | 27 | 22 | F | SLT1GF02N1AV1 | SLT1GF02N5AV1 |
| | 1.5 | 0.07 | 0 | 13 | 11 | 13 | 11 | 120 | G | 27 | 22 | F | SLT1GF02V1AV1 | SLT1GF02V5AV1 |
| | 2.0 | 0.14 | 0 | 11 | 9 | 11 | 9 | 80 | G | 27 | 22 | F | SLT1GF02N1AV2 | SLT1GF02N5AV2 |
| | 2.0 | 0.14 | 0 | 11 | 9 | 11 | 9 | 120 | G | 27 | 22 | F | SLT1GF02V1AV2 | SLT1GF02V5AV2 |
| | 2.5 | 0.21 | 0 | 9 | 7 | 9 | 7 | 80 | G | 27 | 22 | F | SLT1GF02N1AV3 | SLT1GF02N5AV3 |
| | 2.5 | 0.21 | 0 | 9 | 7 | 9 | 7 | 120 | G | 27 | 22 | F | SLT1GF02V1AV3 | SLT1GF02V5AV3 |
| | 3.0 | 0.25 | 0 | 6 | 4 | 6 | 4 | 80 | G | 27 | 22 | F | SLT1GF02N1AV4 | SLT1GF02N5AV4 |
| | 3.0 | 0.25 | 0 | 6 | 4 | 6 | 4 | 120 | G | 27 | 22 | F | SLT1GF02V1AV4 | SLT1GF02V5AV4 |
| | 4.0 | 0.35 | 0 | 3.5 | 2 | 3.5 | 2 | 80 | G | 27 | 22 | F | SLT1GF02N1AV5 | SLT1GF02N5AV5 |
| | 4.0 | 0.35 | 0 | 3.5 | 2 | 3.5 | 2 | 120 | G | 27 | 22 | F | SLT1GF02V1AV5 | SLT1GF02V5AV5 |
| 1/4" | 1.5 | 0.07 | 0 | 13 | 11 | 13 | 11 | 80 | G | 27 | 22 | F | SLT1GF02N1BV1 | SLT1GF02N5BV1 |
| | 1.5 | 0.07 | 0 | 13 | 11 | 13 | 11 | 120 | G | 27 | 22 | F | SLT1GF02V1BV1 | SLT1GF02V5BV1 |
| | 2.0 | 0.14 | 0 | 11 | 9 | 11 | 9 | 80 | G | 27 | 22 | F | SLT1GF02N1BV2 | SLT1GF02N5BV2 |
| | 2.0 | 0.14 | 0 | 11 | 9 | 11 | 9 | 120 | G | 27 | 22 | F | SLT1GF02V1BV2 | SLT1GF02V5BV2 |
| | 2.5 | 0.21 | 0 | 9 | 7 | 9 | 7 | 80 | G | 27 | 22 | F | SLT1GF02N1BV3 | SLT1GF02N5BV3 |
| | 2.5 | 0.21 | 0 | 9 | 7 | 9 | 7 | 120 | G | 27 | 22 | F | SLT1GF02V1BV3 | SLT1GF02V5BV3 |
| | 3.0 | 0.25 | 0 | 6 | 4 | 6 | 4 | 80 | G | 27 | 22 | F | SLT1GF02N1BV4 | SLT1GF02N5BV4 |
| | 3.0 | 0.25 | 0 | 6 | 4 | 6 | 4 | 120 | G | 27 | 22 | F | SLT1GF02V1BV4 | SLT1GF02V5BV4 |
| | 4.0 | 0.35 | 0 | 3.5 | 2 | 3.5 | 2 | 80 | G | 27 | 22 | F | SLT1GF02N1BV5 | SLT1GF02N5BV5 |
| | 4.0 | 0.35 | 0 | 3.5 | 2 | 3.5 | 2 | 120 | G | 27 | 22 | F | SLT1GF02V1BV5 | SLT1GF02V5BV5 |

USLT 1 Normally Closed Energized、De-energized-----Flow Chart

Normally Closed

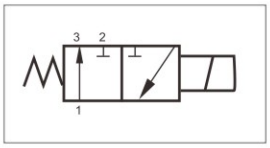


De-energized

Pressure:No.2

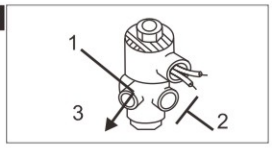


Energized

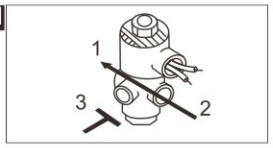

# SLT Series 3/2-way Direct Acting Flameproof Solenoid Valve

## SLT2 Normally Open Valve Selection List

| Pipe Size | Orifice mm | CV Factor | Operating pressure differential(kgf/cm²) | | | | | Max. fluids Temp. ℃ | Coil Type | Power consumption | | Coil Grade | Model Code 220VAC | |
|---|---|---|---|---|---|---|---|---|---|---|---|---|---|---|
| | | | Min. | Max. | | | | | | VA | W | | Body material | |
| | | | | Air、Gas、Water、Hot water、Liquid | | Light oil ≤20CST | | | | AC 220V | DC 24V | | Forged brass | Stainless Steel |
| | | | | AC | DC | AC | DC | | | | | | | |
| 1/8" | 1.5 | 0.07 | 0 | 13 | 11 | 13 | 11 | 80 | G | 27 | 22 | F | SLT2GF02N1AV1 | SLT2GF02N5AV1 |
| | 1.5 | 0.07 | 0 | 13 | 11 | 13 | 11 | 120 | G | 27 | 22 | F | SLT2GF02V1AV1 | SLT2GF02V5AV1 |
| | 2.0 | 0.14 | 0 | 11 | 9 | 11 | 9 | 80 | G | 27 | 22 | F | SLT2GF02N1AV2 | SLT2GF02N5AV2 |
| | 2.0 | 0.14 | 0 | 11 | 9 | 11 | 9 | 120 | G | 27 | 22 | F | SLT2GF02V1AV2 | SLT2GF02V5AV2 |
| | 2.5 | 0.21 | 0 | 9 | 7 | 9 | 7 | 80 | G | 27 | 22 | F | SLT2GF02N1AV3 | SLT2GF02N5AV3 |
| | 2.5 | 0.21 | 0 | 9 | 7 | 9 | 7 | 120 | G | 27 | 22 | F | SLT2GF02V1AV3 | SLT2GF02V5AV3 |
| | 3.0 | 0.25 | 0 | 6 | 4 | 6 | 4 | 80 | G | 27 | 22 | F | SLT2GF02N1AV4 | SLT2GF02N5AV4 |
| | 3.0 | 0.25 | 0 | 6 | 4 | 6 | 4 | 120 | G | 27 | 22 | F | SLT2GF02V1AV4 | SLT2GF02V5AV4 |
| | 4.0 | 0.35 | 0 | 3.5 | 2 | 3.5 | 2 | 80 | G | 27 | 22 | F | SLT2GF02N1AV5 | SLT2GF02N5AV5 |
| | 4.0 | 0.35 | 0 | 3.5 | 2 | 3.5 | 2 | 120 | G | 27 | 22 | F | SLT2GF02V1AV5 | SLT2GF02V5AV5 |
| 1/4" | 1.5 | 0.07 | 0 | 13 | 11 | 13 | 11 | 80 | G | 27 | 22 | F | SLT2GF02N1BV1 | SLT2GF02N5BV1 |
| | 1.5 | 0.07 | 0 | 13 | 11 | 13 | 11 | 120 | G | 27 | 22 | F | SLT2GF02V1BV1 | SLT2GF02V5BV1 |
| | 2.0 | 0.14 | 0 | 11 | 9 | 11 | 9 | 80 | G | 27 | 22 | F | SLT2GF02N1BV2 | SLT2GF02N5BV2 |
| | 2.0 | 0.14 | 0 | 11 | 9 | 11 | 9 | 120 | G | 27 | 22 | F | SLT2GF02V1BV2 | SLT2GF02V5BV2 |
| | 2.5 | 0.21 | 0 | 9 | 7 | 9 | 7 | 80 | G | 27 | 22 | F | SLT2GF02N1BV3 | SLT2GF02N5BV3 |
| | 2.5 | 0.21 | 0 | 9 | 7 | 9 | 7 | 120 | G | 27 | 22 | F | SLT2GF02V1BV3 | SLT2GF02V5BV3 |
| | 3.0 | 0.25 | 0 | 6 | 4 | 6 | 4 | 80 | G | 27 | 22 | F | SLT2GF02N1BV4 | SLT2GF02N5BV4 |
| | 3.0 | 0.25 | 0 | 6 | 4 | 6 | 4 | 120 | G | 27 | 22 | F | SLT2GF02V1BV4 | SLT2GF02V5BV4 |
| | 4.0 | 0.35 | 0 | 3.5 | 2 | 3.5 | 2 | 80 | G | 27 | 22 | F | SLT2GF02N1BV5 | SLT2GF02N5BV5 |
| | 4.0 | 0.35 | 0 | 3.5 | 2 | 3.5 | 2 | 120 | G | 27 | 22 | F | SLT2GF02V1BV5 | SLT2GF02V5BV5 |

USLT 2 Normally Open　　Energized、De-energized-----Flow Chart

Normally Open

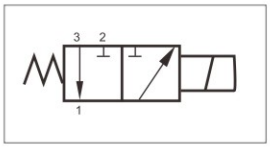


De-energized

Pressure:No.3

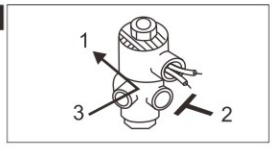


Energized

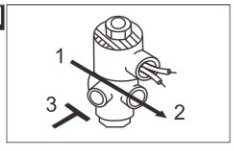

# SLT Series 3/2-way Direct Acting Flameproof Solenoid Valve

## SLT3 Universal Valve Selection List

| Pipe Size | Orifice mm | CV Factor | Operating pressure differential(kgf/cm²) Min. | Max. Air、Gas、Water、Hot water、Liquid AC | Max. Air、Gas、Water、Hot water、Liquid DC | Max. Light oil ≤20CST AC | Max. Light oil ≤20CST DC | Max. fluids Temp. ℃ | Coil Type | Power consumption VA AC 220V | Power consumption W DC 24V | Coil Grade | Model Code 220VAC Body material: Forged brass | Model Code 220VAC Body material: Stainless Steel |
|---|---|---|---|---|---|---|---|---|---|---|---|---|---|---|
| 1/8" | 1.5 | 0.07 | 0 | 7 | 5 | 7 | 5 | 80 | G | 27 | 22 | F | SLT3GF02N1AV1 | SLT3GF02N5AV1 |
| | 1.5 | 0.07 | 0 | 7 | 5 | 7 | 5 | 120 | G | 27 | 22 | F | SLT3GF02V1AV1 | SLT3GF02V5AV1 |
| | 2.0 | 0.14 | 0 | 5 | 4 | 5 | 4 | 80 | G | 27 | 22 | F | SLT3GF02N1AV2 | SLT3GF02N5AV2 |
| | 2.0 | 0.14 | 0 | 5 | 4 | 5 | 4 | 120 | G | 27 | 22 | F | SLT3GF02V1AV2 | SLT3GF02V5AV2 |
| | 2.5 | 0.21 | 0 | 4 | 3 | 4 | 3 | 80 | G | 27 | 22 | F | SLT3GF02N1AV3 | SLT3GF02N5AV3 |
| | 2.5 | 0.21 | 0 | 4 | 3 | 4 | 3 | 120 | G | 27 | 22 | F | SLT3GF02V1AV3 | SLT3GF02V5AV3 |
| | 3.0 | 0.25 | 0 | 2.5 | 2 | 2.5 | 2 | 80 | G | 27 | 22 | F | SLT3GF02N1AV4 | SLT3GF02N5AV4 |
| | 3.0 | 0.25 | 0 | 2.5 | 2 | 2.5 | 2 | 120 | G | 27 | 22 | F | SLT3GF02V1AV4 | SLT3GF02V5AV4 |
| | 4.0 | 0.35 | 0 | 1.7 | 0.8 | 1.7 | 0.8 | 80 | G | 27 | 22 | F | SLT3GF02N1AV5 | SLT3GF02N5AV5 |
| | 4.0 | 0.35 | 0 | 1.7 | 0.8 | 1.7 | 0.8 | 120 | G | 27 | 22 | F | SLT3GF02V1AV5 | SLT3GF02V5AV5 |
| 1/4" | 1.5 | 0.07 | 0 | 7 | 5 | 7 | 5 | 80 | G | 27 | 22 | F | SLT3GF02N1BV1 | SLT3GF02N5BV1 |
| | 1.5 | 0.07 | 0 | 7 | 5 | 7 | 5 | 120 | G | 27 | 22 | F | SLT3GF02V1BV1 | SLT3GF02V5BV1 |
| | 2.0 | 0.14 | 0 | 5 | 4 | 5 | 4 | 80 | G | 27 | 22 | F | SLT3GF02N1BV2 | SLT3GF02N5BV2 |
| | 2.0 | 0.14 | 0 | 5 | 4 | 5 | 4 | 120 | G | 27 | 22 | F | SLT3GF02V1BV2 | SLT3GF02V5BV2 |
| | 2.5 | 0.21 | 0 | 4 | 3 | 4 | 3 | 80 | G | 27 | 22 | F | SLT3GF02N1BV3 | SLT3GF02N5BV3 |
| | 2.5 | 0.21 | 0 | 4 | 3 | 4 | 3 | 120 | G | 27 | 22 | F | SLT3GF02V1BV3 | SLT3GF02V5BV3 |
| | 3.0 | 0.25 | 0 | 2.5 | 2 | 2.5 | 2 | 80 | G | 27 | 22 | F | SLT3GF02N1BV4 | SLT3GF02N5BV4 |
| | 3.0 | 0.25 | 0 | 2.5 | 2 | 2.5 | 2 | 120 | G | 27 | 22 | F | SLT3GF02V1BV4 | SLT3GF02V5BV4 |
| | 4.0 | 0.35 | 0 | 1.7 | 0.8 | 1.7 | 0.8 | 80 | G | 27 | 22 | F | SLT3GF02N1BV5 | SLT3GF02N5BV5 |
| | 4.0 | 0.35 | 0 | 1.7 | 0.8 | 1.7 | 0.8 | 120 | G | 27 | 22 | F | SLT3GF02V1BV5 | SLT3GF02V5BV5 |

## USLT 3 Universal Energized/De-energized ---Flow Chart

Universal

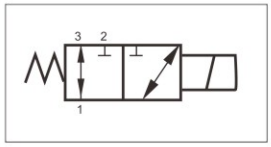


De-energized

Pressure:any port

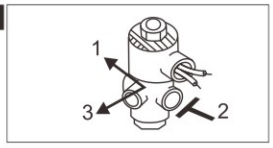


Energized

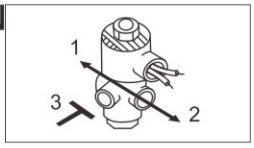

# SLT Series 3/2-way Direct Acting Flameproof Solenoid Valve

## SLT4 Diverting Valve Selection List

| Pipe Size | Orifice mm | CV Factor | Operating pressure differential(kgf/cm²) Min. | Max. Air、Gas、Water、Hot water、Liquid AC | Max. Air、Gas、Water、Hot water、Liquid DC | Max. Light oil ≤20CST AC | Max. Light oil ≤20CST DC | Max. fluids Temp. ℃ | Coil Type | Power consumption VA AC 220V | Power consumption W DC 24V | Coil Grade | Model Code 220VAC Body material: Forged brass | Model Code 220VAC Body material: Stainless Steel |
|---|---|---|---|---|---|---|---|---|---|---|---|---|---|---|
| 1/8" | 1.5 | 0.07 | 0 | 13 | 11 | 13 | 11 | 80 | G | 27 | 22 | F | SLT4GF02N1AV1 | SLT4GF02N5AV1 |
| | 1.5 | 0.07 | 0 | 13 | 11 | 13 | 11 | 120 | G | 27 | 22 | F | SLT4GF02V1AV1 | SLT4GF02V5AV1 |
| | 2.0 | 0.14 | 0 | 11 | 9 | 11 | 9 | 80 | G | 27 | 22 | F | SLT4GF02N1AV2 | SLT4GF02N5AV2 |
| | 2.0 | 0.14 | 0 | 11 | 9 | 11 | 9 | 120 | G | 27 | 22 | F | SLT4GF02V1AV2 | SLT4GF02V5AV2 |
| | 2.5 | 0.21 | 0 | 9 | 7 | 9 | 7 | 80 | G | 27 | 22 | F | SLT4GF02N1AV3 | SLT4GF02N5AV3 |
| | 2.5 | 0.21 | 0 | 9 | 7 | 9 | 7 | 120 | G | 27 | 22 | F | SLT4GF02V1AV3 | SLT4GF02V5AV3 |
| | 3.0 | 0.25 | 0 | 6 | 4 | 6 | 4 | 80 | G | 27 | 22 | F | SLT4GF02N1AV4 | SLT4GF02N5AV4 |
| | 3.0 | 0.25 | 0 | 6 | 4 | 6 | 4 | 120 | G | 27 | 22 | F | SLT4GF02V1AV4 | SLT4GF02V5AV4 |
| | 4.0 | 0.35 | 0 | 3.5 | 2 | 3.5 | 2 | 80 | G | 27 | 22 | F | SLT4GF02N1AV5 | SLT4GF02N5AV5 |
| | 4.0 | 0.35 | 0 | 3.5 | 2 | 3.5 | 2 | 120 | G | 27 | 22 | F | SLT4GF02V1AV5 | SLT4GF02V5AV5 |
| 1/4" | 1.5 | 0.07 | 0 | 13 | 11 | 13 | 11 | 80 | G | 27 | 22 | F | SLT4GF02N1BV1 | SLT4GF02N5BV1 |
| | 1.5 | 0.07 | 0 | 13 | 11 | 13 | 11 | 120 | G | 27 | 22 | F | SLT4GF02V1BV1 | SLT4GF02V5BV1 |
| | 2.0 | 0.14 | 0 | 11 | 9 | 11 | 9 | 80 | G | 27 | 22 | F | SLT4GF02N1BV2 | SLT4GF02N5BV2 |
| | 2.0 | 0.14 | 0 | 11 | 9 | 11 | 9 | 120 | G | 27 | 22 | F | SLT4GF02V1BV2 | SLT4GF02V5BV2 |
| | 2.5 | 0.21 | 0 | 9 | 7 | 9 | 7 | 80 | G | 27 | 22 | F | SLT4GF02N1BV3 | SLT4GF02N5BV3 |
| | 2.5 | 0.21 | 0 | 9 | 7 | 9 | 7 | 120 | G | 27 | 22 | F | SLT4GF02V1BV3 | SLT4GF02V5BV3 |
| | 3.0 | 0.25 | 0 | 6 | 4 | 6 | 4 | 80 | G | 27 | 22 | F | SLT4GF02N1BV4 | SLT4GF02N5BV4 |
| | 3.0 | 0.25 | 0 | 6 | 4 | 6 | 4 | 120 | G | 27 | 22 | F | SLT4GF02V1BV4 | SLT4GF02V5BV4 |
| | 4.0 | 0.35 | 0 | 3.5 | 2 | 3.5 | 2 | 80 | G | 27 | 22 | F | SLT4GF02N1BV5 | SLT4GF02N5BV5 |
| | 4.0 | 0.35 | 0 | 3.5 | 2 | 3.5 | 2 | 120 | G | 27 | 22 | F | SLT4GF02V1BV5 | SLT4GF02V5BV5 |

USLT 4 Universal Energized/De-energized ---Flow Chart

Diverting

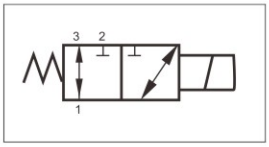


De-energized

Pressure:any port NO.1

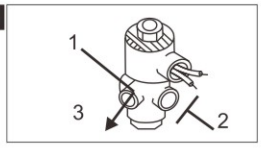


Energized

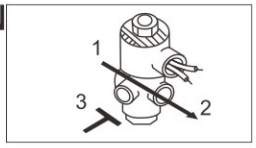

# SLT Series 3/2-way Direct Acting Flameproof Solenoid Valve

## Valve Selection List

| Pipe Size | Orifice mm | CV Factor | Operating pressure differential(kgf/cm²) | | | | Max. fluids Temp. ℃ | Power consumption | Model Code DC24V | | Weight KG |
|---|---|---|---|---|---|---|---|---|---|---|---|
| | | | Min. | Max. | | | | DC | Forged brass | SS316 | |
| | | | | Air | Water Liquid | Light oil ≤20CST | | | | | |
| 1/4" | 6 | 0.8 | 0 | 8 | 8 | 8 | 80 | 22 | SLT3GF13N1B06 | SLT3GF13N3B06 | 2.7 |
| 1/4" | 6 | 0.8 | 0 | 8 | 8 | 8 | 120 | 22 | SLT3GF13E1B06 | SLT3GF13E3B06 | 2.7 |
| 1/4" | 6 | 0.8 | 0 | 8 | 8 | 8 | 120 | 22 | SLT3GF13V1B06 | SLT3GF13V3B06 | 2.7 |

Note: if you choose the splite type. The max pressure is 3 bar to DN6.

## External Dimensions

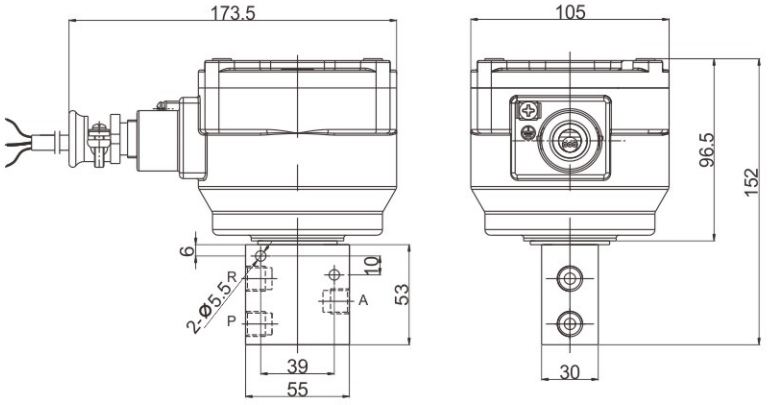




## Functional diagram

2-way Normally Closed

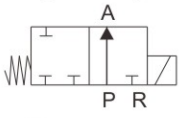


❶

2-way Normally Open

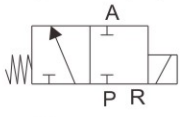


❷

1 in and 2 out of flow type

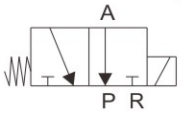


❸

Multiple functions are optional

❶ 2/2 normally closed type: P is the entrance, A is for exit, and R is blocked.

❷ 2/2 normally open type: R is the entrance, A is for exit, and P is blocked.

❸ 3/2, 1 in and 2 out of flow type: A is the entrance, P and R are exported.

1 out of the confluence type

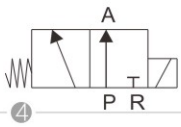


❹

3-way Normally Closed

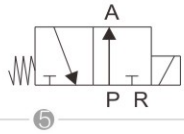


❺

3-way Normally Open

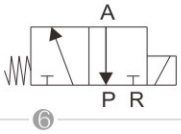


❻

Multiple functions are optional

❹ 3/ 2,2, 1 out of the confluence type: P,R for entrance, and A for exit.

❺ 3/2 normally closed type: P is pressure port, A is outlet, R is exhaust port.

❻ 3/2 normally open type: R is pressure port, A is outlet, P is outlet.

# SLT Series 3/2-way Pilot Opearted Diaphragm Flameproof Solenoid Valve

## Product Feature

Body material：Forged Brass

Ambient temp：-20℃~+55℃ Medium temperature：0℃~+120℃

Atmospheric pressure：80~110kpa Relative humidity：≤95%(+25℃)

Voltage：AC220V 、DC24V(Other voltage can ask the company)

Seals：NBR、EPDM、VITON

Flame-proof grade：Ex d IIB T4 Gb

Explosion-proof standard：GB3836.1、GB3836.2。

Temperature lever T4:Safe object surface temperature ≤135℃

It is suitable for other explosive gas environment except coal mine gas and the place containing Ⅱ A, Ⅱ B T1~T4 explosive gas environment zone 1 and 2

Flow as the arrow ,mounts in any position ; best position is solenoid vertical and upright direction

Specifications for thread of cable outlet device:M20x1.5
If the cable protective cover needs to be installed, the certified explosion-proof connector must be used

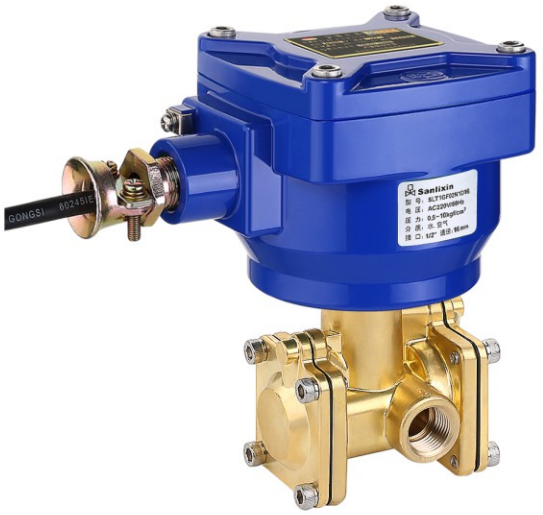

## Solenoid Valves Numbering System for Order

| 1 | 2 | 3 | 4 | 5 | 6 | 7 | 8 | 9 | 10 |
|---|---|---|---|---|---|---|---|---|---|
| Valve Series | Mode of Operation | Coil Type | Coil Class | Voltage | Seal Material | Body Material | Pipe Size | Orifice (mm) | Options |
| SLT | 1 | G | F | 02 | N | 1 | D | 16 | N |
| | 1=Normally Closed<br>2=Normally Open | G= Flameproof coil | F= F grade | 02= AC220V<br>13= DC24V | N=NBR<br>E=EPDM<br>V=VITON | 1=Forged Brass | C=3/8”<br>D=1/2” | 16=16.0 | N=NPT |

## External Dimensions

Weight：3.3kg

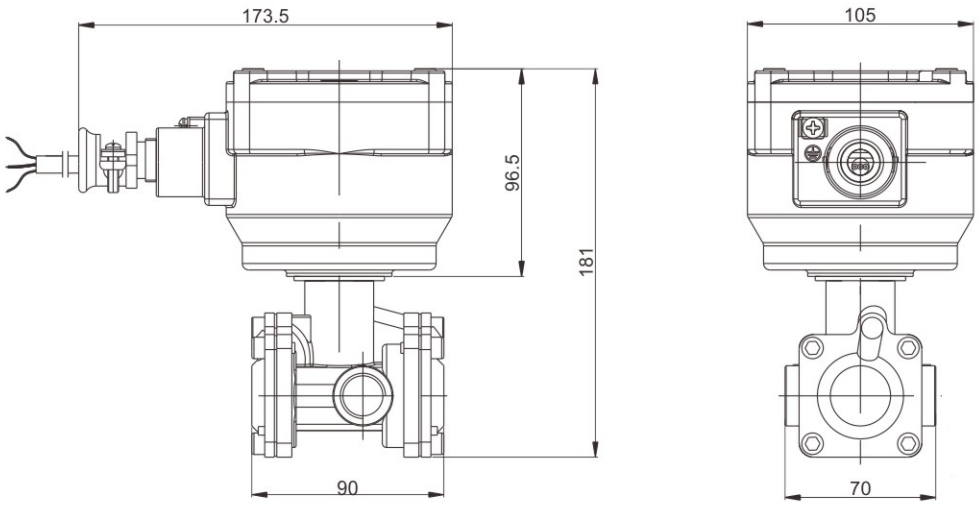

# SLT Series 3/2-way Pilot Opearted Diaphragm Flameproof Solenoid Valve

## Valve Selection List(Normally Closed)

De-energized

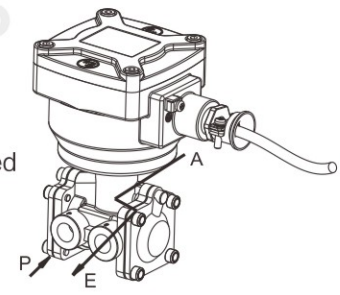


Energized

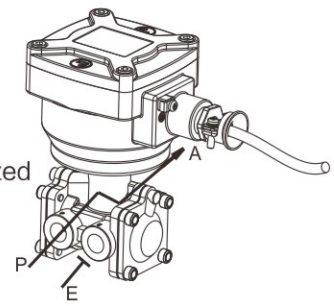


| Pipe Size | Orifice mm | CV Factor | Operating pressure differential(kgf/cm²) Min. | Max. Air | Max. Water、Liquid | Max. fluids Temp. ℃ | Coil Type | Power consumption VA AC 220V | Power consumption W DC 24V | Model Code 220VAC 50Hz |
|---|---|---|---|---|---|---|---|---|---|---|
| 3/8" | 16 | 3.3 | 0.5 | 10 | 10 | 80 | F | 27 | 22 | SLT1GF02N1C16 |
| | 16 | 3.3 | 0.5 | 10 | 10 | 120 | F | 27 | 22 | SLT1GF02E1C16 |
| | 16 | 3.3 | 0.5 | 10 | 10 | 120 | F | 27 | 22 | SLT1GF02V1C16 |
| 1/2" | 16 | 3.3 | 0.5 | 10 | 10 | 80 | F | 27 | 22 | SLT1GF02N1D16 |
| | 16 | 3.3 | 0.5 | 10 | 10 | 120 | F | 27 | 22 | SLT1GF02E1D16 |
| | 16 | 3.3 | 0.5 | 10 | 10 | 120 | F | 27 | 22 | SLT1GF02V1D16 |

## Valve Selection List(Normally Open)

De-energized

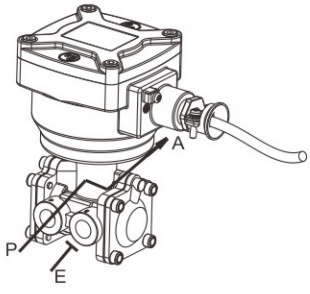


Energized

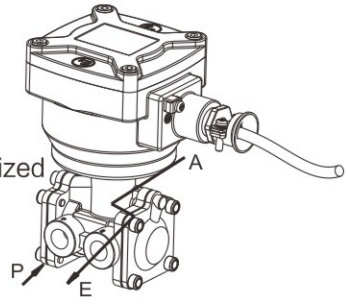


| Pipe Size | Orifice mm | CV Factor | Operating pressure differential(kgf/cm²) Min. | Max. Air | Max. Water、Liquid | Max. fluids Temp. ℃ | Coil Type | Power consumption VA AC 220V | Power consumption W DC 24V | Model Code 220VAC 50Hz |
|---|---|---|---|---|---|---|---|---|---|---|
| 3/8" | 16 | 3.3 | 0.5 | 10 | 10 | 80 | F | 27 | 22 | SLT2GF02N1C16 |
| | 16 | 3.3 | 0.5 | 10 | 10 | 120 | F | 27 | 22 | SLT2GF02E1C16 |
| | 16 | 3.3 | 0.5 | 10 | 10 | 120 | F | 27 | 22 | SLT2GF02V1C16 |
| 1/2" | 16 | 3.3 | 0.5 | 10 | 10 | 80 | F | 27 | 22 | SLT2GF02N1D16 |
| | 16 | 3.3 | 0.5 | 10 | 10 | 120 | F | 27 | 22 | SLT2GF02E1D16 |
| | 16 | 3.3 | 0.5 | 10 | 10 | 120 | F | 27 | 22 | SLT2GF02V1D16 |

# SAV Series Direct Acting Gas Flameproof Solenoid Valve <Normally Closed>

## Product Feature

SAV series gas solenoid valve used in the Burner, Hear Equipment, Industrial Furnace and so on of the gas or air media.So as to achieve the procedure control or long-distance control of systems and equipment.

Direct acting zero differential pressure,large flow rate

2/2 way normally closed solenoid valve, closed when de-energized open , open when energized Switching time: < 1s

Body material：Pack Alloy

Seals：VITON

Medium：coal gas, nature gas, air and the other normal non-etchant gas

Atmospheric pressure：80~110kpa Relative humidity：≤95%(+25℃)

Voltage：AC220V 、DC24V(Other voltage can ask the company)

Flame-proof grade：Ex d IIB T4 Gb

Explosion-proof standard：GB3836.1、GB3836.2。

Temperature lever T4:Safe object surface temperature ≤135℃

It is suitable for other explosive gas environment except coal mine gas and the place containing Ⅱ A, Ⅱ B T1~T4 explosive gas environment zone 1 and 2

Flow as the arrow ,mounts in any position ; best position is solenoid vertical and upright direction

Specifications for thread of cable outlet device:M20x1.5
If the cable protective cover needs to be installed, the certified explosion-proof connector must be used





## Solenoid Valves Numbering System for Order

| 1 | 2 | 3 | 4 | 5 | 6 | 7 | 8 | 9 | 10 |
|---|---|---|---|---|---|---|---|---|---|
| Valve Series | Mode of Operation | Coil Type | Coil Class | Voltage | Seal Material | Body Material | Pipe Size | Orifice (mm) | Options |
| SAV | 1 | G | F | 02 | V | 8 | E | 20 | N |
| | 1=Normally Close | G= Flameproof coil | F= F grade | 02= AC220V<br>13= DC24V<br>Other voltage can ask the company | V=VITON | 8= Aluminum alloy | B=1/4 "<br>C=3/8 "<br>D=1/2 "<br>D=1/2 "<br>E=3/4 " | 06=6.0<br>09=9.0<br>19=19.0 | N=NPT |

# SAV Series Direct Acting Gas Flameproof Solenoid Valve <Normally Closed>

## Valve Selection List

| Pipe Size | Orifice mm | CV Factor | Work Pressure mbar | | Power consumption | | Coil Type | Coil Class | Max. fluids Temp. ℃ | Model Code 220VAC | Weight KG |
|---|---|---|---|---|---|---|---|---|---|---|---|
| | | | Min. | Max. | VA AC 220V | W DC 24V | | | | | |
| 1/4" | 6 | 0.8 | 0 | 800 | 27 | 22 | G | F | 80 | SAV1GF02V8B06 | 2.0 |
| | 9 | 1.2 | 0 | 600 | 27 | 22 | G | F | 80 | SAV1GF02V8B09 | 2.0 |
| 3/8" | 6 | 0.8 | 0 | 800 | 27 | 22 | G | F | 80 | SAV1GF02V8C06 | 2.0 |
| | 9 | 1.4 | 0 | 600 | 27 | 22 | G | F | 80 | SAV1GF02V8C09 | 2.0 |
| 1/2" | 9 | 1.4 | 0 | 600 | 27 | 22 | G | F | 80 | SAV1GF02V8D09 | 2.0 |
| | 19 | 7.5 | 0 | 360 | 27 | 22 | G | F | 80 | SAV1GF02V8D19 | 2.4 |
| 3/4" | 19 | 7.5 | 0 | 360 | 27 | 22 | G | F | 80 | SAV1GF02V8E19 | 2.4 |

## External Dimensions

Φ6.0-9.0mm

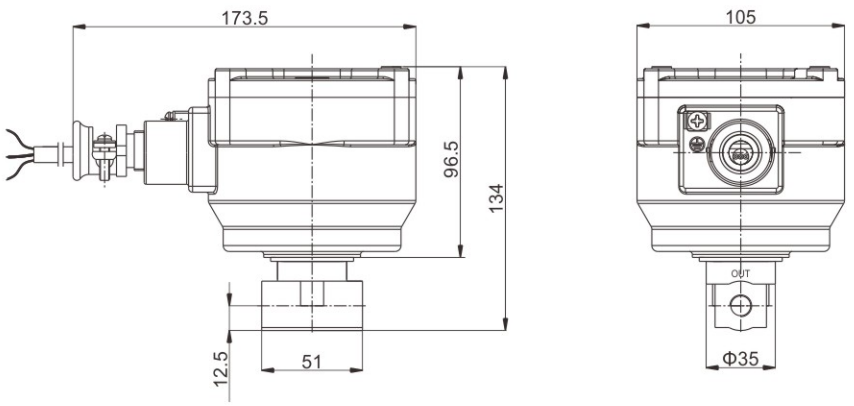


Φ19.0mm

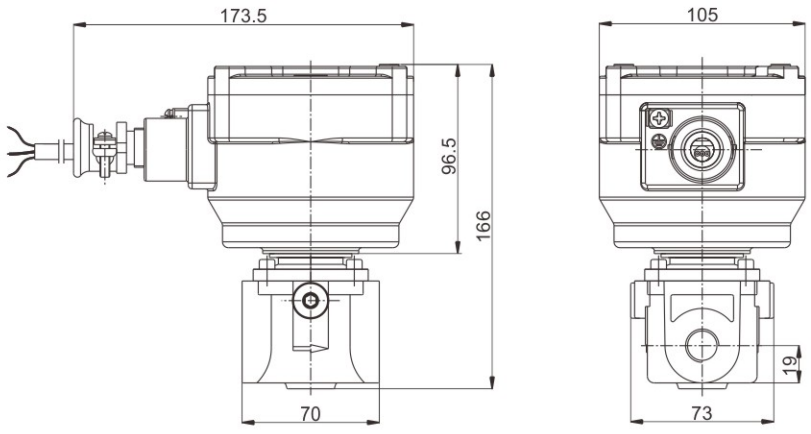

# ZKS Vacuum Series Flameproof Solenoid Valve

## Solenoid Valves Numbering System for Order

| 1 | 2 | 3 | 4 | 5 | 6 | 7 | 8 | 9 | 10 |
|---|---|---|---|---|---|---|---|---|---|
| Valve Series | Mode of Operation | Coil Type | Coil Class | Voltage | Seal Material | Body Material | Pipe Size | Orifice (mm) | Options |
| ZKS | 1 | G | F | 02 | V | 1 | E | 20 | N |
| | 1=Normally Close | G= Flameproof coil | F= F grade | 02= AC220V<br>13= DC24V<br>Other voltage can ask the company | N= NBR<br>E= EPDM<br>V= VITON | 1= Forged Brass<br>4=SS304<br>3=SS316 | A=1/8"<br>B=1/4" | C3=2.5<br>03=3.0<br>04=4.0<br>05=5.0 | N=NPT |
| | | | | | | | C=3/8"<br>D=1/2" | 04=4.0<br>05=5.0 | |
| | | | | | | | C=3/8"<br>D=1/2" | 16=16.0 | |
| | | | | | | | E=3/4" | 20=20.0 | |
| | | | | | | | G=1" | 20=20.0<br>25=25.0 | |
| | | | | | | | F= Flange connection | 15=15.0<br>20=20.0<br>25=25.0 | |

# ZKS Compact Series 2/2-way Direct Acting Vacuum Flameproof Solenoid Valve <Normally Closed>

## Product Feature

2/2 way normally closed solenoid valve, closed when de-energized open , open when energized

Body material：Forged Brass、SS304、SS316

Products for series production, small volume, large flow, wide range of application

Atmospheric pressure：80~110kpa Relative humidity：≤95%(+25℃)

Voltage：AC220V 、DC24V(Other voltage can ask the company)

Seals：NBR、EPDM、VITON

Flame-proof grade：Ex d IIB T4 Gb

Explosion-proof standard：GB3836.1、GB3836.2。

It is suitable for other explosive gas environment except coal mine gas and the place containing Ⅱ A, Ⅱ B T1~T4 explosive gas environment zone 1 and 2

Flow as the arrow ,mounts in any position ; best position is solenoid vertical and upright direction

Specifications for thread of cable outlet device:M20x1.5
If the cable protective cover needs to be installed, the certified explosion-proof connector must be used



## External Dimensions

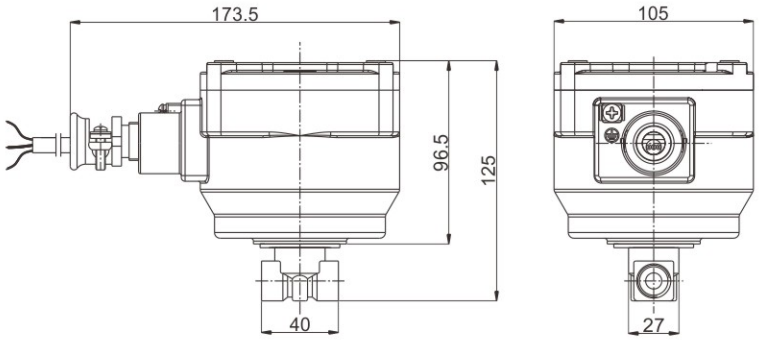


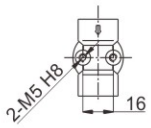


Φ2.5、Φ3mm(1/8”、1/4”)

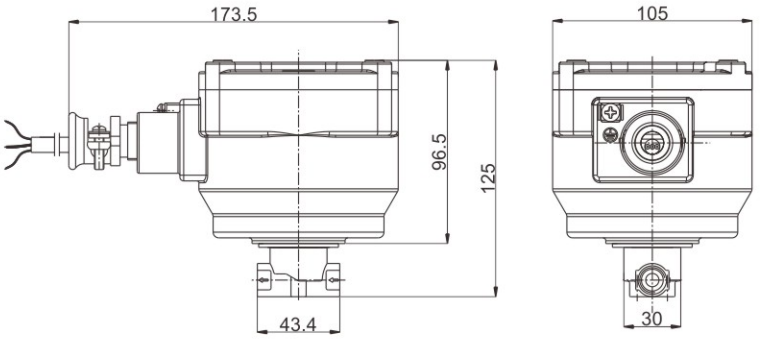


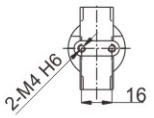


Φ4、Φ5mm(1/8”、1/4”)

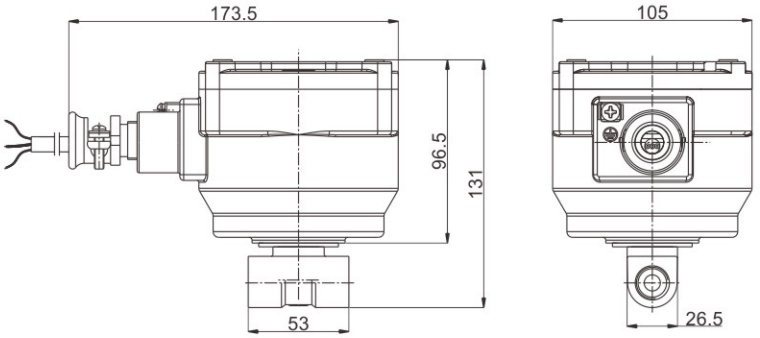


Φ4、Φ5mm(3/8”、1/2”)

# ZKS Compact Series 2/2-way Direct Acting Vacuum Flameproof Solenoid Valve <Normally Closed>

## Vacuum Pipeline Connection Example

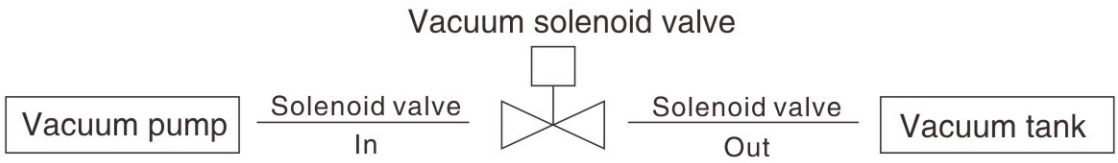


## Valve Selection List

| Pipe Size | Orifice mm | CV Factor | Operating pressure differential(kgf/cm²) Min. | Operating pressure differential(kgf/cm²) Max. Gas | Max. fluids Temp. ℃ | Coil Type | Power consumption VA AC 220V | Power consumption W DC 24V | Coil Grade | Model Code 220VAC Body material Forged brass | Model Code 220VAC Body material SS316 | Weight KG |
|---|---|---|---|---|---|---|---|---|---|---|---|---|
| 1/8" | 2.5 | 0.23 | −1 | 5 | 80 | G | 27 | 22 | F | ZKS1GF02N1AC3 | ZKS1GF02N3AC3 | 2.0 |
| | 2.5 | 0.23 | −1 | 5 | 120 | G | 27 | 22 | F | ZKS1GF02E1AC3 | ZKS1GF02E3AC3 | 2.0 |
| | 2.5 | 0.23 | −1 | 5 | 120 | G | 27 | 22 | F | ZKS1GF02V1AC3 | ZKS1GF02V3AC3 | 2.0 |
| | 3 | 0.23 | −1 | 4 | 80 | G | 27 | 22 | F | ZKS1GF02N1A03 | ZKS1GF02N3A03 | 2.0 |
| | 3 | 0.23 | −1 | 4 | 120 | G | 27 | 22 | F | ZKS1GF02E1A03 | ZKS1GF02E3A03 | 2.0 |
| | 3 | 0.23 | −1 | 4 | 120 | G | 27 | 22 | F | ZKS1GF02V1A03 | ZKS1GF02V3A03 | 2.0 |
| | 4 | 0.6 | −1 | 3 | 80 | G | 27 | 22 | F | ZKS1GF02N1A04 | ZKS1GF02N3A04 | 2.0 |
| | 4 | 0.6 | −1 | 3 | 120 | G | 27 | 22 | F | ZKS1GF02E1A04 | ZKS1GF02E3A04 | 2.0 |
| | 4 | 0.6 | −1 | 3 | 120 | G | 27 | 22 | F | ZKS1GF02V1A04 | ZKS1GF02V3A04 | 2.0 |
| | 5 | 0.65 | −1 | 2 | 80 | G | 27 | 22 | F | ZKS1GF02N1A05 | ZKS1GF02N3A05 | 2.0 |
| | 5 | 0.65 | −1 | 2 | 120 | G | 27 | 22 | F | ZKS1GF02E1A05 | ZKS1GF02E3A05 | 2.0 |
| | 5 | 0.65 | −1 | 2 | 120 | G | 27 | 22 | F | ZKS1GF02V1A05 | ZKS1GF02V3A05 | 2.0 |
| 1/4" | 2.5 | 0.23 | −1 | 5 | 80 | G | 27 | 22 | F | ZKS1GF02N1BC3 | ZKS1GF02N3BC3 | 2.0 |
| | 2.5 | 0.23 | −1 | 5 | 120 | G | 27 | 22 | F | ZKS1GF02E1BC3 | ZKS1GF02E3BC3 | 2.0 |
| | 2.5 | 0.23 | −1 | 5 | 120 | G | 27 | 22 | F | ZKS1GF02V1BC3 | ZKS1GF02V3BC3 | 2.0 |
| | 3 | 0.23 | −1 | 4 | 80 | G | 27 | 22 | F | ZKS1GF02N1B03 | ZKS1GF02N3B03 | 2.0 |
| | 3 | 0.23 | −1 | 4 | 120 | G | 27 | 22 | F | ZKS1GF02E1B03 | ZKS1GF02E3B03 | 2.0 |
| | 3 | 0.23 | −1 | 4 | 120 | G | 27 | 22 | F | ZKS1GF02V1B03 | ZKS1GF02V3B03 | 2.0 |
| | 4 | 0.6 | −1 | 3 | 80 | G | 27 | 22 | F | ZKS1GF02N1B04 | ZKS1GF02N3B04 | 1.9 |
| | 4 | 0.6 | −1 | 3 | 120 | G | 27 | 22 | F | ZKS1GF02E1B04 | ZKS1GF02E3B04 | 1.9 |
| | 4 | 0.6 | −1 | 3 | 120 | G | 27 | 22 | F | ZKS1GF02V1B04 | ZKS1GF02V3B04 | 1.9 |
| | 5 | 0.65 | −1 | 2 | 80 | G | 27 | 22 | F | ZKS1GF02N1B05 | ZKS1GF02N3B05 | 1.9 |
| | 5 | 0.65 | −1 | 2 | 120 | G | 27 | 22 | F | ZKS1GF02E1B05 | ZKS1GF02E3B05 | 1.9 |
| | 5 | 0.65 | −1 | 2 | 120 | G | 27 | 22 | F | ZKS1GF02V1B05 | ZKS1GF02V3B05 | 1.9 |
| 3/8" | 4 | 0.6 | −1 | 3 | 80 | G | 27 | 22 | F | ZKS1GF02N1C04 | ZKS1GF02N4C04 | 2.2 |
| | 4 | 0.6 | −1 | 3 | 120 | G | 27 | 22 | F | ZKS1GF02E1C04 | ZKS1GF02E4C04 | 2.2 |
| | 4 | 0.6 | −1 | 3 | 120 | G | 27 | 22 | F | ZKS1GF02V1C04 | ZKS1GF02V4C04 | 2.2 |
| | 5 | 0.65 | −1 | 2 | 80 | G | 27 | 22 | F | ZKS1GF02N1C05 | ZKS1GF02N4C05 | 2.2 |
| | 5 | 0.65 | −1 | 2 | 120 | G | 27 | 22 | F | ZKS1GF02E1C05 | ZKS1GF02E4C05 | 2.2 |
| | 5 | 0.65 | −1 | 2 | 120 | G | 27 | 22 | F | ZKS1GF02V1C05 | ZKS1GF02V4C05 | 2.2 |
| 1/2" | 4 | 0.65 | −1 | 3 | 80 | G | 27 | 22 | F | ZKS1GF02N1D04 | ZKS1GF02N4D04 | 2.1 |
| | 4 | 0.65 | −1 | 3 | 120 | G | 27 | 22 | F | ZKS1GF02E1D04 | ZKS1GF02E4D04 | 2.1 |
| | 4 | 0.65 | −1 | 3 | 120 | G | 27 | 22 | F | ZKS1GF02V1D04 | ZKS1GF02V4D04 | 2.1 |
| | 5 | 0.8 | −1 | 2 | 80 | G | 27 | 22 | F | ZKS1GF02N1D05 | ZKS1GF02N4D05 | 2.1 |
| | 5 | 0.8 | −1 | 2 | 120 | G | 27 | 22 | F | ZKS1GF02E1D05 | ZKS1GF02E4D05 | 2.1 |
| | 5 | 0.8 | −1 | 2 | 120 | G | 27 | 22 | F | ZKS1GF02V1D05 | ZKS1GF02V4D05 | 2.1 |

# ZKS Series 2/2-way Large Diameter Direct Acting Vacuum Flameproof Solenoid Valve <Normally Closed>

## Product Feature

2/2 way normally closed solenoid valve, closed when de-energized open , open when energized

Body material：Forged Brass

Atmospheric pressure：80~110kpa Relative humidity：≤95%(+25℃)

Voltage：AC220V 、DC24V(Other voltage can ask the company)

Seals：NBR、EPDM、VITON

Flame-proof grade：Ex d IIB T4 Gb

Explosion-proof standard：GB3836.1、GB3836.2。

It is suitable for other explosive gas environment except coal mine gas and the place containing Ⅱ A, Ⅱ B T1~T4 explosive gas environment zone 1 and 2

Flow as the arrow ,mounts in any position ; best position is solenoid vertical and upright direction

Specifications for thread of cable outlet device:M20x1.5
If the cable protective cover needs to be installed, the certified explosion-proof connector must be used



## Vacuum Pipeline Connection Example

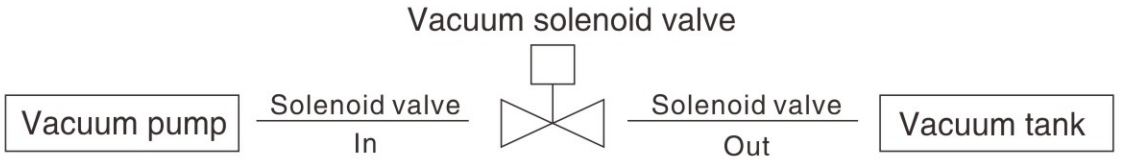


## External Dimensions

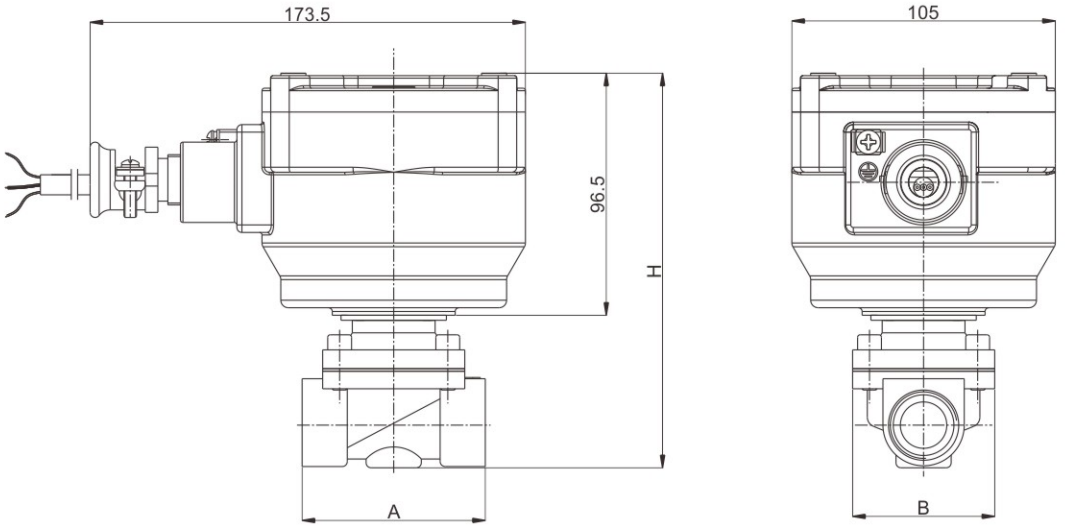

# ZKS Series 2/2-way Large Diameter Direct Acting Vacuum Flameproof Solenoid Valve <Normally Closed>

## Valve Selection List

| Pipe Size | Orifice mm | CV Factor | Operating pressure differential(kgf/cm²) | | | Max. fluids Temp. ℃ | Coil Type | Power consumption | | Coil Grade | External Dimensions Length x Width x Height Lx B x H | Model Code 220VAC | Weight KG |
|---|---|---|---|---|---|---|---|---|---|---|---|---|---|
| | | | Min. | Max. Gas | | | | VA | W | | | | |
| | | | | AC | DC | | | AC 220V | DC 24V | | | | |
| 3/8" | 16 | 4.8 | −1 | 6 | 5 | 80 | G | 27 | 22 | F | 69×57×150 | ZKS1GF02N1C16 | 2.5 |
| | 16 | 4.8 | −1 | 6 | 5 | 120 | G | 27 | 22 | F | 69×57×150 | ZKS1GF02E1C16 | 2.5 |
| | 16 | 4.8 | −1 | 6 | 5 | 120 | G | 27 | 22 | F | 69×57×150 | ZKS1GF02V1C16 | 2.5 |
| 1/2" | 16 | 4.8 | −1 | 6 | 5 | 80 | G | 27 | 22 | F | 69×57×150 | ZKS1GF02N1D16 | 2.5 |
| | 16 | 4.8 | −1 | 6 | 5 | 120 | G | 27 | 22 | F | 69×57×150 | ZKS1GF02E1D16 | 2.5 |
| | 16 | 4.8 | −1 | 6 | 5 | 120 | G | 27 | 22 | F | 69×57×150 | ZKS1GF02V1D16 | 2.5 |
| 3/4" | 20 | 7.6 | −1 | 6 | 5 | 80 | G | 27 | 22 | F | 73×57×158 | ZKS1GF02N1E20 | 2.7 |
| | 20 | 7.6 | −1 | 6 | 5 | 120 | G | 27 | 22 | F | 73×57×158 | ZKS1GF02E1E20 | 2.7 |
| | 20 | 7.6 | −1 | 6 | 5 | 120 | G | 27 | 22 | F | 73×57×158 | ZKS1GF02V1E20 | 2.7 |
| 1" | 20 | 7.6 | −1 | 6 | 5 | 80 | G | 27 | 22 | F | 80×62×161 | ZKS1GF02N1G20 | 2.8 |
| | 20 | 7.6 | −1 | 6 | 5 | 120 | G | 27 | 22 | F | 80×62×161 | ZKS1GF02E1G20 | 2.8 |
| | 20 | 7.6 | −1 | 6 | 5 | 120 | G | 27 | 22 | F | 80×62×161 | ZKS1GF02V1G20 | 2.8 |
| | 25 | 12 | −1 | 6 | 5 | 80 | G | 27 | 22 | F | 99×77×165 | ZKS1GF02N1G25 | 3.0 |
| | 25 | 12 | −1 | 6 | 5 | 120 | G | 27 | 22 | F | 99×77×165 | ZKS1GF02E1G25 | 3.0 |
| | 25 | 12 | −1 | 6 | 5 | 120 | G | 27 | 22 | F | 99×77×165 | ZKS1GF02V1G25 | 3.0 |

# ZKS Series 2/2-way Large Diameter Direct Acting Vacuum Flameproof Solenoid Valve <Normally Closed>

## Product Feature

2/2 way normally closed solenoid valve, closed when de-energized open , open when energized

Body material：SS304

Atmospheric pressure：80~110kpa Relative humidity：≤95%(+25℃)

Voltage：AC220V 、DC24V(Other voltage can ask the company)

Seals：NBR、EPDM、VITON

Flame-proof grade：Ex d IIB T4 Gb

Explosion-proof standard：GB3836.1、GB3836.2。

It is suitable for other explosive gas environment except coal mine gas and the place containing Ⅱ A, Ⅱ B T1~T4 explosive gas environment zone 1 and 2

Flow as the arrow ,mounts in any position ; best position is solenoid vertical and upright direction

Specifications for thread of cable outlet device:M20x1.5
If the cable protective cover needs to be installed, the certified explosion-proof connector must be used



## Vacuum Pipeline Connection Example

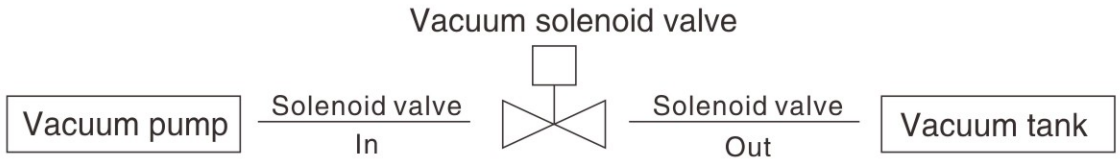


## External Dimensions

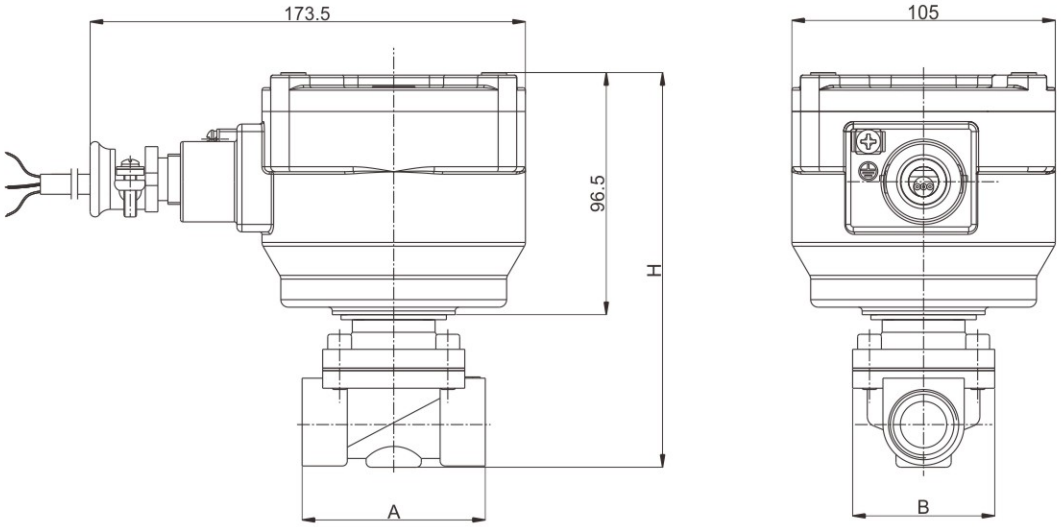

# ZKS Series 2/2-way Large Diameter Direct Acting Vacuum Flameproof Solenoid Valve <Normally Closed>

## Valve Selection List

| Pipe Size | Orifice mm | CV Factor | Operating pressure differential(kgf/cm²) | | | Max. fluids Temp. ℃ | Coil Type | Power consumption | | Coil Grade | External Dimensions Length x Width x Height Lx B x H | Model Code 220VAC | Weight KG |
|---|---|---|---|---|---|---|---|---|---|---|---|---|---|
| | | | Min. | Max. | | | | VA | W | | | | |
| | | | | Gas | | | | AC 220V | DC 24V | | | | |
| | | | | AC | DC | | | | | | | | |
| 3/8" | 16 | 4.8 | −1 | 6 | 5 | 80 | G | 27 | 22 | F | 69×57×150 | ZKS1GF02N4C16 | 2.5 |
| | 16 | 4.8 | −1 | 6 | 5 | 120 | G | 27 | 22 | F | 69×57×150 | ZKS1GF02E4C16 | 2.5 |
| | 16 | 4.8 | −1 | 6 | 5 | 120 | G | 27 | 22 | F | 69×57×150 | ZKS1GF02V4C16 | 2.5 |
| 1/2" | 16 | 4.8 | −1 | 6 | 5 | 80 | G | 27 | 22 | F | 69×57×150 | ZKS1GF02N4D16 | 2.5 |
| | 16 | 4.8 | −1 | 6 | 5 | 120 | G | 27 | 22 | F | 69×57×150 | ZKS1GF02E4D16 | 2.5 |
| | 16 | 4.8 | −1 | 6 | 5 | 120 | G | 27 | 22 | F | 69×57×150 | ZKS1GF02V4D16 | 2.5 |
| 3/4" | 20 | 7.6 | −1 | 6 | 5 | 80 | G | 27 | 22 | F | 73×57×158 | ZKS1GF02N4E20 | 2.7 |
| | 20 | 7.6 | −1 | 6 | 5 | 120 | G | 27 | 22 | F | 73×57×158 | ZKS1GF02E4E20 | 2.7 |
| | 20 | 7.6 | −1 | 6 | 5 | 120 | G | 27 | 22 | F | 73×57×158 | ZKS1GF02V4E20 | 2.7 |
| 1" | 20 | 7.6 | −1 | 6 | 5 | 80 | G | 27 | 22 | F | 80×62×161 | ZKS1GF02N4G25 | 2.8 |
| | 20 | 7.6 | −1 | 6 | 5 | 120 | G | 27 | 22 | F | 80×62×161 | ZKS1GF02E4G25 | 2.8 |
| | 20 | 7.6 | −1 | 6 | 5 | 120 | G | 27 | 22 | F | 80×62×161 | ZKS1GF02V4G25 | 2.8 |
| | 25 | 12 | −1 | 6 | 5 | 80 | G | 27 | 22 | F | 99×77×165 | ZKS1GF02N4G25 | 3.0 |
| | 25 | 12 | −1 | 6 | 5 | 120 | G | 27 | 22 | F | 99×77×165 | ZKS1GF02E4G25 | 3.0 |
| | 25 | 12 | −1 | 6 | 5 | 120 | G | 27 | 22 | F | 99×77×165 | ZKS1GF02V4G25 | 3.0 |

# ZKS Flange Series 2/2-way Large Diameter Direct Acting Vacuum Flameproof Solenoid Valve <Normally Closed>

## Product Feature

2/2 way normally closed solenoid valve, closed when de-energized open , open when energized

Body material：SS304、SS316

Atmospheric pressure：80~110kpa Relative humidity：≤95%(+25℃)

Voltage：AC220V 、DC24V(Other voltage can ask the company)

Seals：NBR、EPDM、VITON

Flame-proof grade：Ex d IIB T4 Gb

Explosion-proof standard：GB3836.1、GB3836.2。

It is suitable for other explosive gas environment except coal mine gas and the place containing Ⅱ A, Ⅱ B T1~T4 explosive gas environment zone 1 and 2

Flow as the arrow ,mounts in any position ; best position is solenoid vertical and upright direction

Specifications for thread of cable outlet device:M20x1.5
If the cable protective cover needs to be installed, the certified explosion-proof connector must be used



## External Dimensions

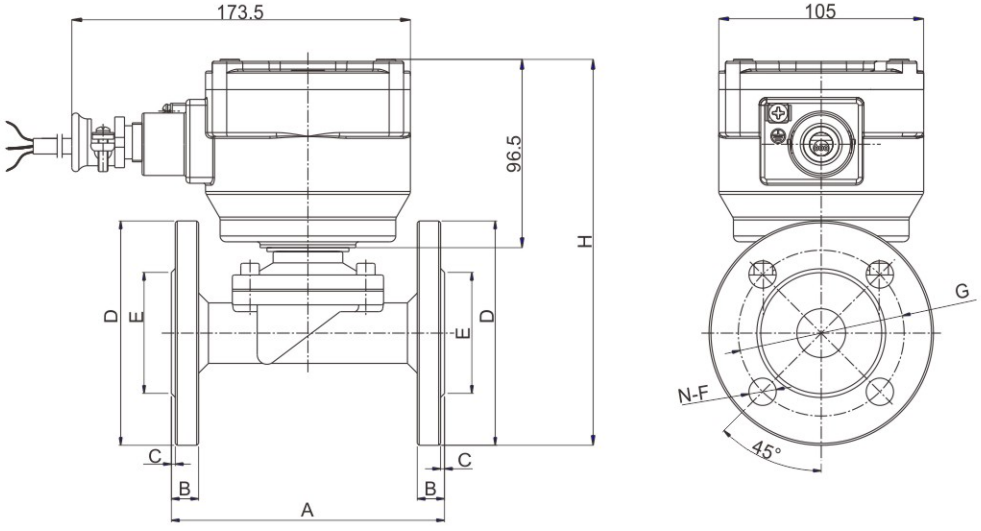


| Model | A | B | C | ΦD | ΦE | N-ΦF | ΦG | H |
|---|---|---|---|---|---|---|---|---|
| ZKS-15BF | 106 | 12 | 2 | 95 | 45 | 4-14 | 65 | 199 |
| ZKS-20BF | 106 | 12 | 2 | 102 | 56 | 4-14 | 75 | 202 |
| ZKS-25BF | 140 | 14 | 2 | 115 | 62 | 4-14 | 85 | 198 |

# ZKS Flange Series 2/2-way Large Diameter Direct Acting Vacuum Flameproof Solenoid Valve <Normally Closed>

## Valve Selection List

| Orifice mm | CV Factor | Operating pressure differential(kgf/cm²) | | | Max. fluids Temp. ℃ | Coil Type | Power consumption | | Coil Grade | Model Code 220VAC | Weight KG |
|---|---|---|---|---|---|---|---|---|---|---|---|
| | | Min. | Max. | | | | VA | W | | | |
| | | | Gas | | | | AC 220V | DC 24V | | | |
| | | | AC | DC | | | | | | | |
| 15 | 4.8 | −1 | 6 | 5 | 80 | G | 27 | 22 | F | ZKS1GF02N4F15 | 3.4 |
| 15 | 4.8 | −1 | 6 | 5 | 120 | G | 27 | 22 | F | ZKS1GF02E4F15 | 3.4 |
| 15 | 4.8 | −1 | 6 | 5 | 120 | G | 27 | 22 | F | ZKS1GF02V4F15 | 3.4 |
| 20 | 7.6 | −1 | 6 | 5 | 80 | G | 27 | 22 | F | ZKS1GF02N4F20 | 3.6 |
| 20 | 7.6 | −1 | 6 | 5 | 120 | G | 27 | 22 | F | ZKS1GF02E4F20 | 3.6 |
| 20 | 7.6 | −1 | 6 | 5 | 120 | G | 27 | 22 | F | ZKS1GF02V4F20 | 3.6 |
| 25 | 12 | −1 | 6 | 5 | 80 | G | 27 | 22 | F | ZKS1GF02N4F25 | 4.5 |
| 25 | 12 | −1 | 6 | 5 | 120 | G | 27 | 22 | F | ZKS1GF02E4F25 | 4.5 |
| 25 | 12 | −1 | 6 | 5 | 120 | G | 27 | 22 | F | ZKS1GF02V4F25 | 4.5 |

三力信 Sanlixin®

# SOLENOID VALVE

**Sales Center in Indonesia**

三力信 Sanlixin® Sanlixin Indonesia

www.solenoidvalve.cn

Lindeteves Trade Center
- LTC lantai GF2 Blok A23 No 9 JL.Hayam Wuruk No.127 Jakarta Barat
Tel:0062 2156983081
Fax:0062 2156983082
Email: benny@solenoidvalve. cn

**VIET GARDEN COMPANY**

三力信 Sanlixin® Sanlixin Vietnam

www.solenoidvalve.vn

205 Dao Duy Tu St., Dist.10, HCMC, Vietnam
Contact: Nguyen Van Huan
Mobile: 0084-918 099 856
Tel: 0084-8-3957 4060 Ext.112
Fax: 0084-8-3957 4059
Email: info@solenoidvalve. vn

**Sales Center in Malaysia**

三力信 Sanlixin® Sanlixin Malaysia

www.solenoidvalve.cn

SPLT Consult Re Engrg Svcs Sdn Bhd
38, Jalan Sutera Merah 2, Taman Sutera.
81200 Johor Bahru, Johor DT, Malaysia.
Tel:+607-235 7739 / +6016-733 4120
Fax:+607-241 6268
Email: lenst@solenoidvalve. cn

**Sales Center in Spain**

三力信 Sanlixin® Sanlixin Spain

www.solenoidvalve.cn

C/Marqués del Turia, 48 Paiporta
46200 Valencia-Spain
Tel. +34 722 327 973.
Carlos Vicente to Representaciones Tecnicas
Email: carlos@solenoidvalve.cn

**Sales Center in Mexico**

三力信 Sanlixin® Sanlixin Mexico

www.solenoidvalve.cn

Cipres 280 Street, Orange Building
406, Colonia Atalmpa, Municipality Cuahutemoc,
Cp. 06450, City Of Mexico, Mexico Country.
Mobile Phone: +52 5564765558.
Office Phone: 01 52 5562851881
Ing. Jesus Soberanes Perez
soberanesjesus@solenoidvalve.cn

**Sales Center in UK**

三力信 Sanlixin® Sanlixin UK

www.aircoproducts.co.uk

AIRCO PRODUCTS LIMITED
Unit 10 Stafford Park 12
Telford
Shropshire
TF3 3BJ
Telephone: 01952 200120
Email: sales@aircoproducts.co.uk

**Sales Center in USA**

GC VALVES A DEMA COMPANY

www.gcvalves.com

America General Agent: GC VALVES
4525 E. Industrial St. Unit 4C
Simi Valley, CA 93063
Ph. 800-582-4232
Fx .582-582-0210

**Sales Center in France**

ELV solenoid valve
Technologies:eicomposants the:miques

www.cbm.fr

3 Rue Jules Verne
Parc d' Activités Airspace33187 LE HAILLAN Cedex
Tél. 33 (0)5 56 08 62 59
Fax. 33 (0)5 56 42 58 15
info@cbm.fr

**Sales Center in Poland**

A+ TECH

www.aplustech.pl

A+ TECH Sp. z o.o.
ul. Warzelnicza 27A,
03-255 Warsaw,
Poland
Tel./Fax.+48 22 811 5080
Mobile. +48 602 862 125
+48 694 082 868
E-mail.biuro@aplustech.pl

## YUYAO SANLIXIN SOLENOID VALVE CO.,LTD.

Add: No 9.Hongqiao Road,Yuyao, Zhejiang,China
Tel: + 86 - 574 - 62640822 62636060 62559181
Fax: + 86 - 574 - 62636060 P.C.: 315400
Http: // www.solenoidvalve.cn www.sanlixin.com
E-mail: sanlixin@solenoidvalve.cn